PART ID	QTY	PART DESCRIPTION	PART NO.	SOURCE OF SUPPLY
1	2	".138-32 UNJC-3B (#6-32) KEENSERT MATERIAL: 302 CRES	KNC0632J	FAIRCHILD AEROSPACE FASTENER DIVISION

CREATION DATE 20-Sep-00
MODEL NAME PI_CAGE_SPRT_2
DRAWING NAME 67213MPDF45011

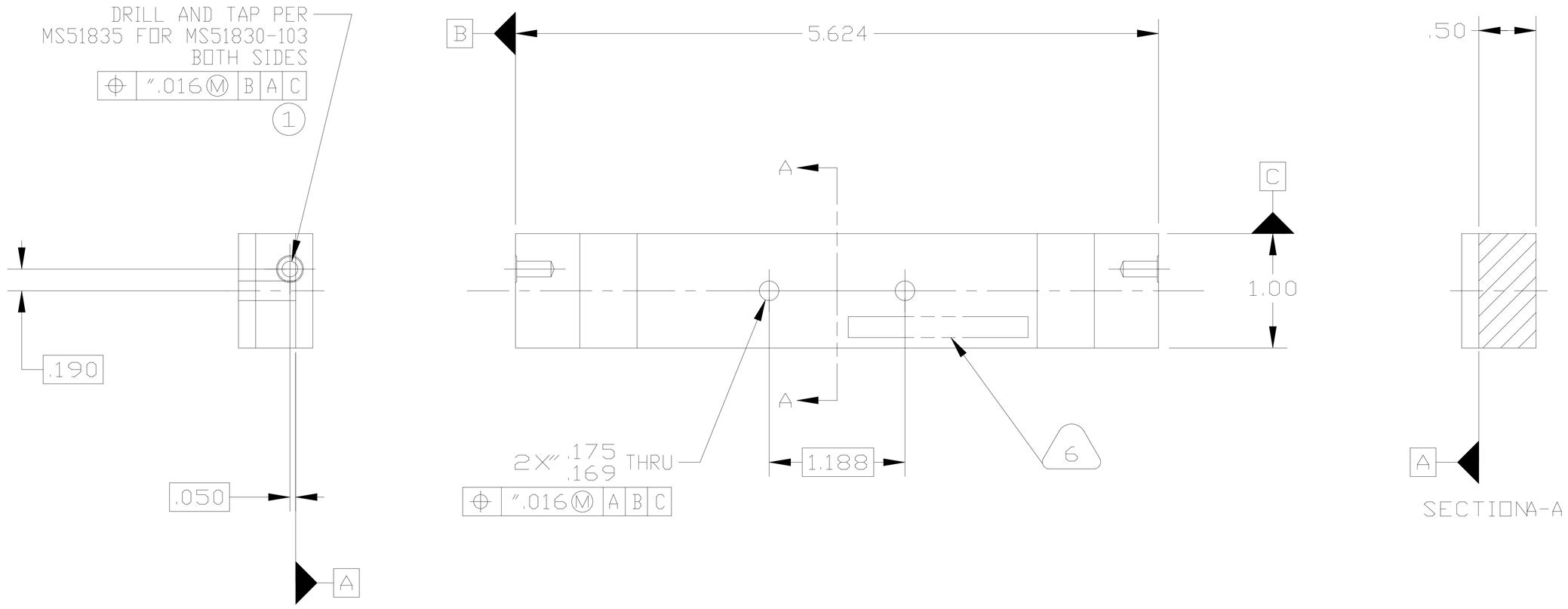

NOTES:

1. THIS DRAWING IS PER ANSI/ASME Y14.5M-1994.
2. MATERIAL ALUMINUM PLATE PER QQ-A-250/11
3. CHEMICAL CONVERSION COAT PER MIL-C-5541, CLASS 1A, ALL HOLES AND SURFACES PRIOR TO INSTALLING KEENSERTS.
4. INSTALL KEENSERTS $^{.015}_{.005}$ BELOW MOUNTING SURFACE.
5. ALL DIMENSIONS ARE SYMMETRICAL ABOUT CENTRAL DATUM PLANES "B" AND "C" UNLESS OTHERWISE SPECIFIED.
6. IDENTIFY PART, AFTER APPLICATION OF SURFACE FINISH, IN LOCATION SHOWN, AS FOLLOWS: ENGRAVE PART IDENTIFICATION NUMBER (.030 DEEP MAX.) OR INK STAMP (HYSOL # MON-WA BLACK OR #M9N-WA WHITE) USING .10-.12 TALL CHARACTERS. PART IDENTIFICATION NUMBER SHALL INCLUDE THE DRAWING NUMBER, A DASH, THEN THE SERIAL NUMBER. COLOR OF INK SHALL BE BLACK FOR MOST PARTS, AND WHITE FOR PARTS EITHER PAINTED OR ANODIZED BLACK.
7. CLEAN SURFACES WITH ISOPROPYL OR ETHYL ALCOHOL. AIR DRY.
8. WIPE WITH CLEAN LINT FREE CLOTH.
9. HANDLE WITH CLEAN LINT FREE GLOVES.
10. PROTECT WITH CONTAMINATION BARRIER. USE CLEAN, NEW, TRANSPARENT POLYETHELENE BAG FOR SMALL ITEMS, OR 4 MIL THICK (MINIMUM) POLYETHELENE SHEET. SEAL AND MARK WITH INDENTIFICATION NUMBER ON TAG ATTACHED TO BAG.

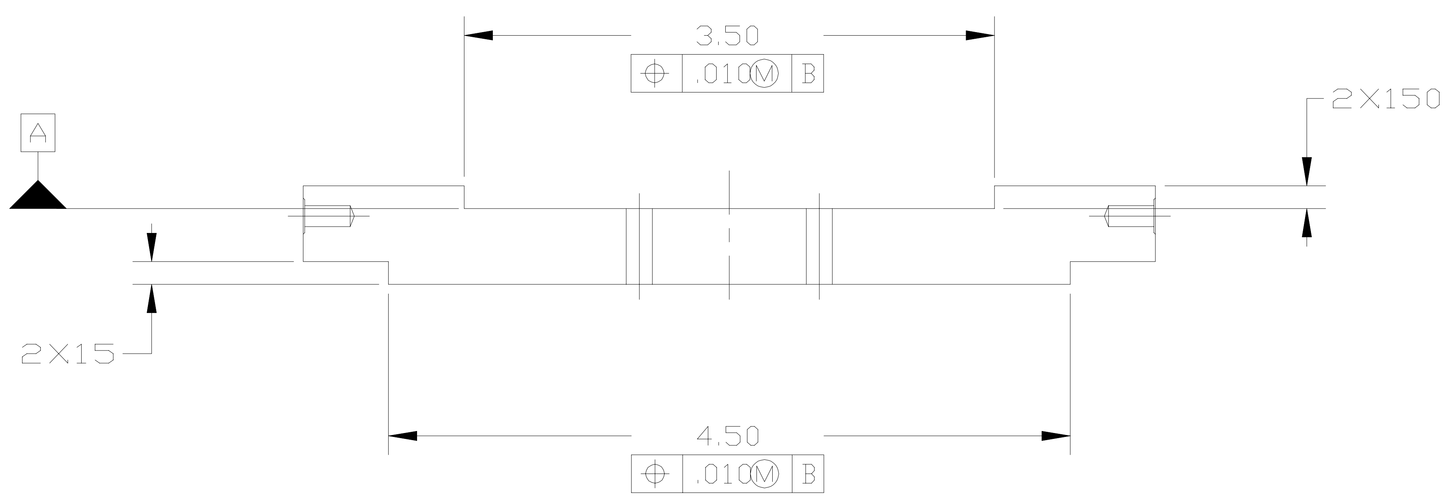

CHG	ZONE	DESCRIPTION	APP/DATE

REVISIONS

CHECK BOX WHEN UNDER CONFIGURATION CONTROL

THIRD ANGLE PROJECTION

CAD DRAWING DO NOT REVISE MANUALLY

DESIGN CONTRACTOR

NATIONAL AERONAUTICS AND SPACE ADMINISTRATION
JOHN GLENN RESEARCH CENTER
LEWIS FIELD, CLEVELAND, OHIO

CONTRACT NUMBER:

FDC FEDERAL DATA CORPORATION

UNLESS OTHERWISE SPECIFIED

1. ALL DIMENSIONS ARE IN IN./LBS.
2. BREAK EDGED .010
3. TOLERANCES:
   .X ± .03
   .XX ± .010
   .XXX ± .005
4. ANGULAR TOLERANCE 0°30'

DRAFTER	C. HOLMES		STRUCTURE		
DESIGNER	C. HOLMES		MAT'L PROC		
REVIEWER			CONFIG MGT		
ENGINEER	R. PUDOKA				
ELEC. ENG.	B. GRUBER				

DIMENSIONS AND TOLERANCING PER ASME Y14.5M-1994

PRINTED:

PRO/ENGINEER2000i
PDM MDL RELEASE LEVEL:
PDM MDL REVISION:
MODELPI_CAGE_SPRT_2

TITLE: PI CAGE SUPPORT 2

NEXT ASS'Y: PI POWER RACK ASSEMBLY 67213MPAF45200

SIZE	CAGE CODE	DRAWING NUMBER	REV
C		67213MPDF45011	
SCALE 1.000		RELEASE DATE 12-15-99	SHEET 1 OF1 / UNITS INCHES