CREATION DATE 18-Sep-00
MODEL NAME CAGE_STRUCT
DRAWING NAME 67213MPDF40035

NOTES:

1. THIS DRAWING IS PER ANSI Y14.5M-1994.
2. MATERIAL ALUMINUM PLATE PER QQ-A-250/11
3. CHEMICAL CONVERSION COAT PER MIL-C-5541, CLASS A, ALL HOLES AND SURFACES.

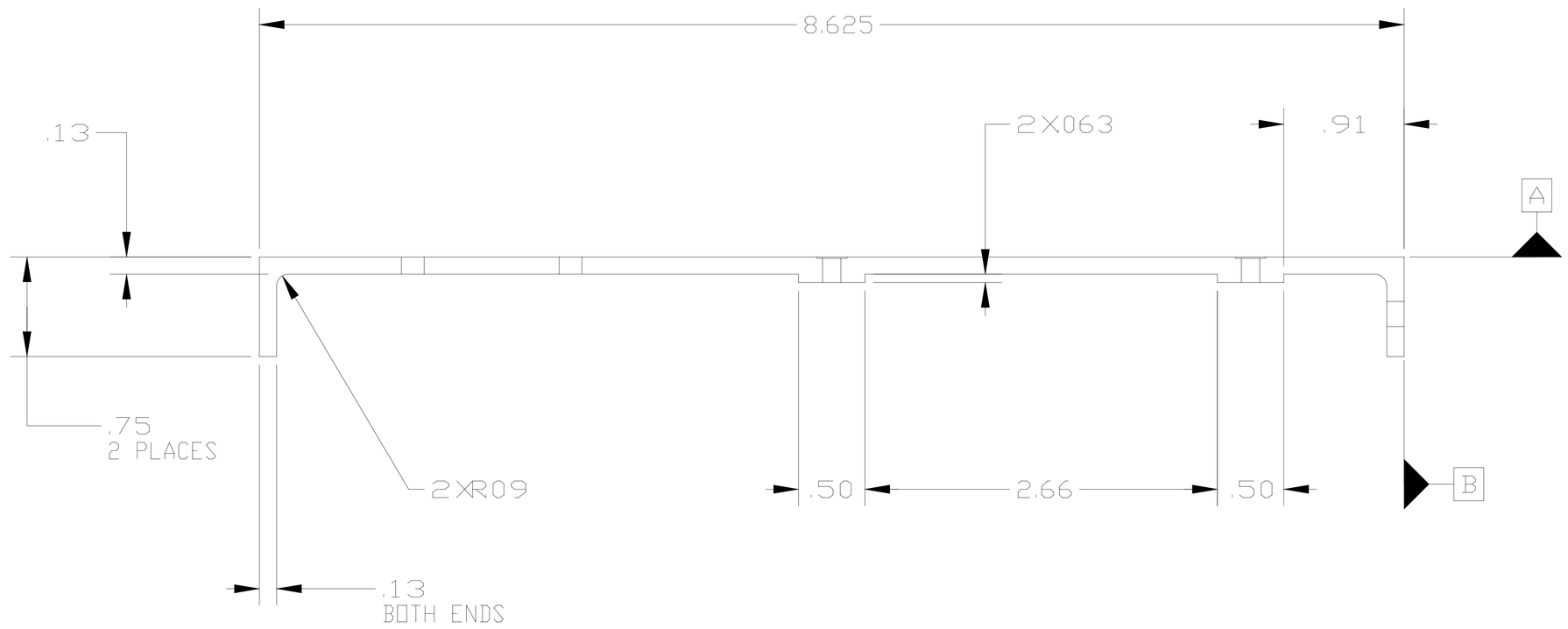

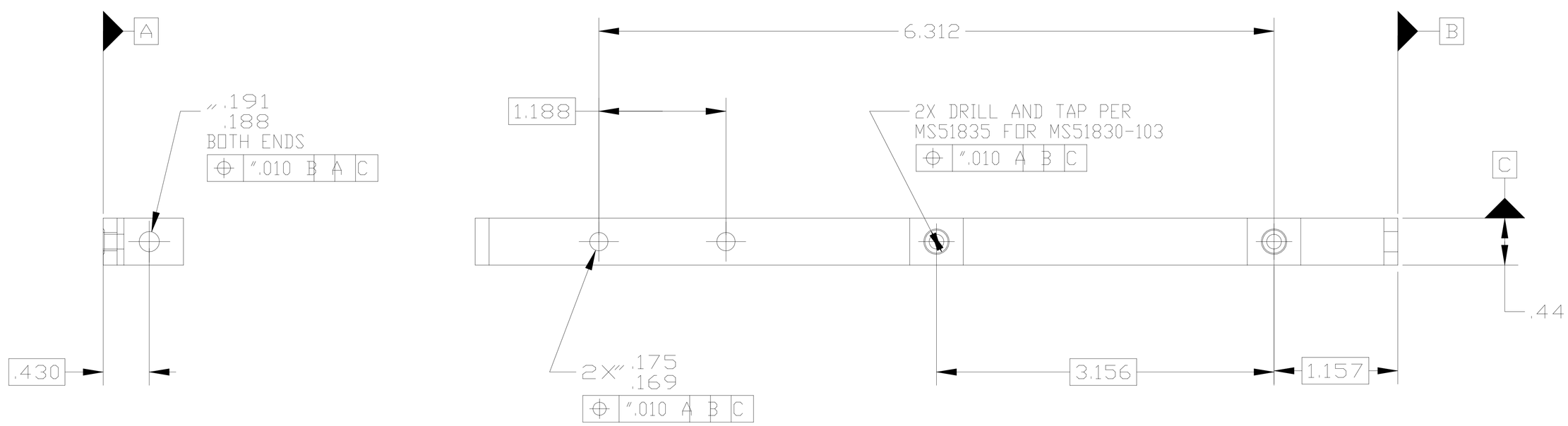

CHG	ZONE	DESCRIPTION	APP/DATE

REVISIONS

CHECK BOX WHEN UNDER CONFIGURATION CONTROL

THIRD ANGLE PROJECTION

CAD DRAWING DO NOT REVISE MANUALLY

DESIGN CONTRACTOR

NATIONAL AERONAUTICS AND SPACE ADMINISTRATION
JOHN GLENN RESEARCH CENTER
LEWIS FIELD, CLEVELAND, OHIO

CONTRACT NUMBER:

FDC FEDERAL DATA CORPORATION

UNLESS OTHERWISE SPECIFIED

1. ALL DIMENSIONS ARE IN IN./LBS.
2. BREAK EDGED .010
3. TOLERANCES:
   .X ± .03
   .XX ± .010
   .XXX ± .005
4. ANGULAR TOLERANCE 0°30'

DRAFTER	C. HOLMES		STRUCTURE	
DESIGNER	C. HOLMES		MAT'L PROC	
REVIEWER			CONFIG MGT	
ENGINEER				

DIMENSIONS AND TOLERANCING PER ASME Y14.5M-1994

PRINTED:

PRO/ENGINEER2000i
PDM MDL RELEASE LEVEL:
PDM MDL REVISION:
MODEL:CAGE_STRUCT

TITLE
CAGE SUPPORT 2 (MACHINED)

NEXT ASS'Y
FSAP MOCKUP/ FSAP ASSEMBLIES
67213MMAF40000/67213MPAF40000

SIZE	CAGE CODE	DRAWING NUMBER	REV
C		67213MGDF40035	
SCALE 1.000		RELEASE DATE	SHEET 1 OF1
			UNITS INCHES