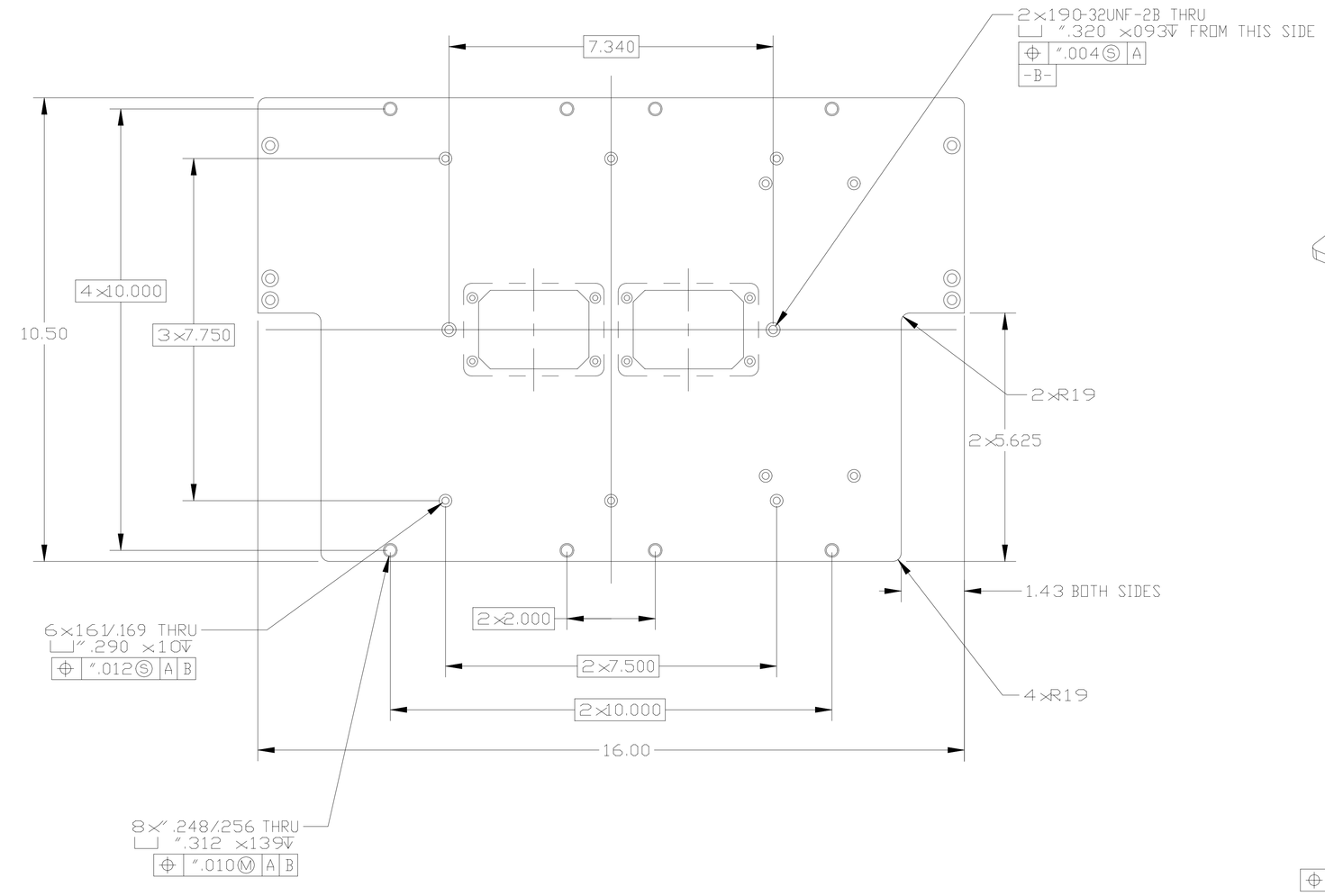

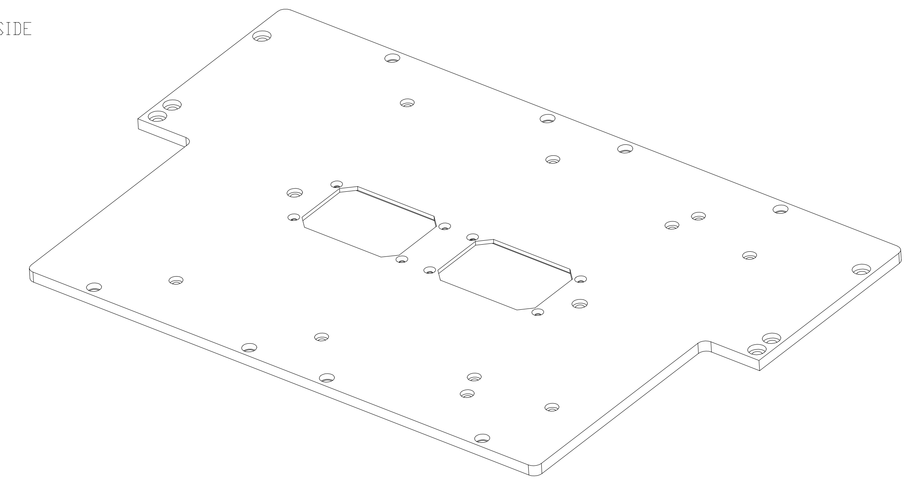

NOTES:

1. DIMENSIONS IN ACCORDANCE WITH ANSI Y14.5M-1982 SPECIFICATION.
2. MAT'L: 6061-T651 ALUMINUM ALLOY PER QQA 250/11.
3. GOLD ANODIZE PER MIL-A-8625, TYPE II, CLASS 2. DIMENSIONS APPLY AFTER ANODIZE.

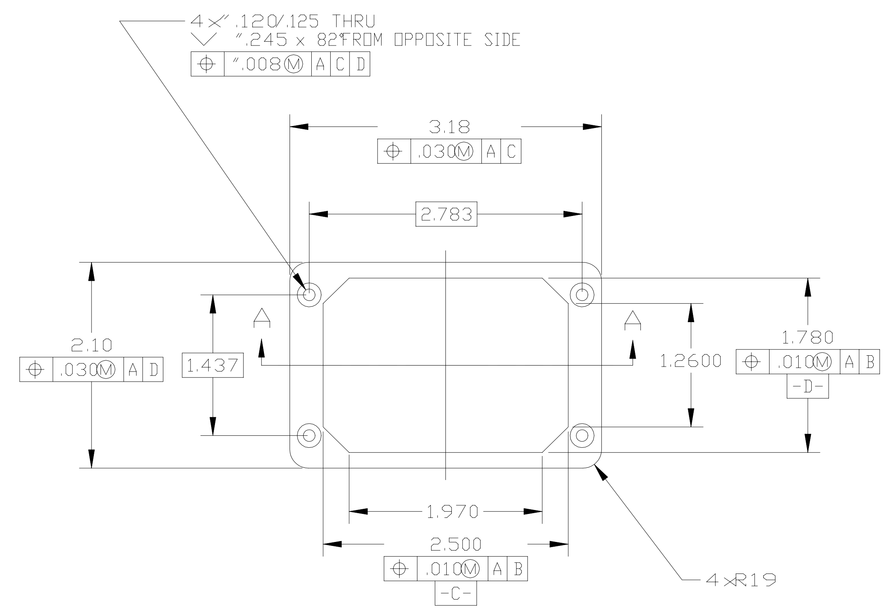

DETAIL A
SCALE 1.0x
TYPICAL 2 PLACES

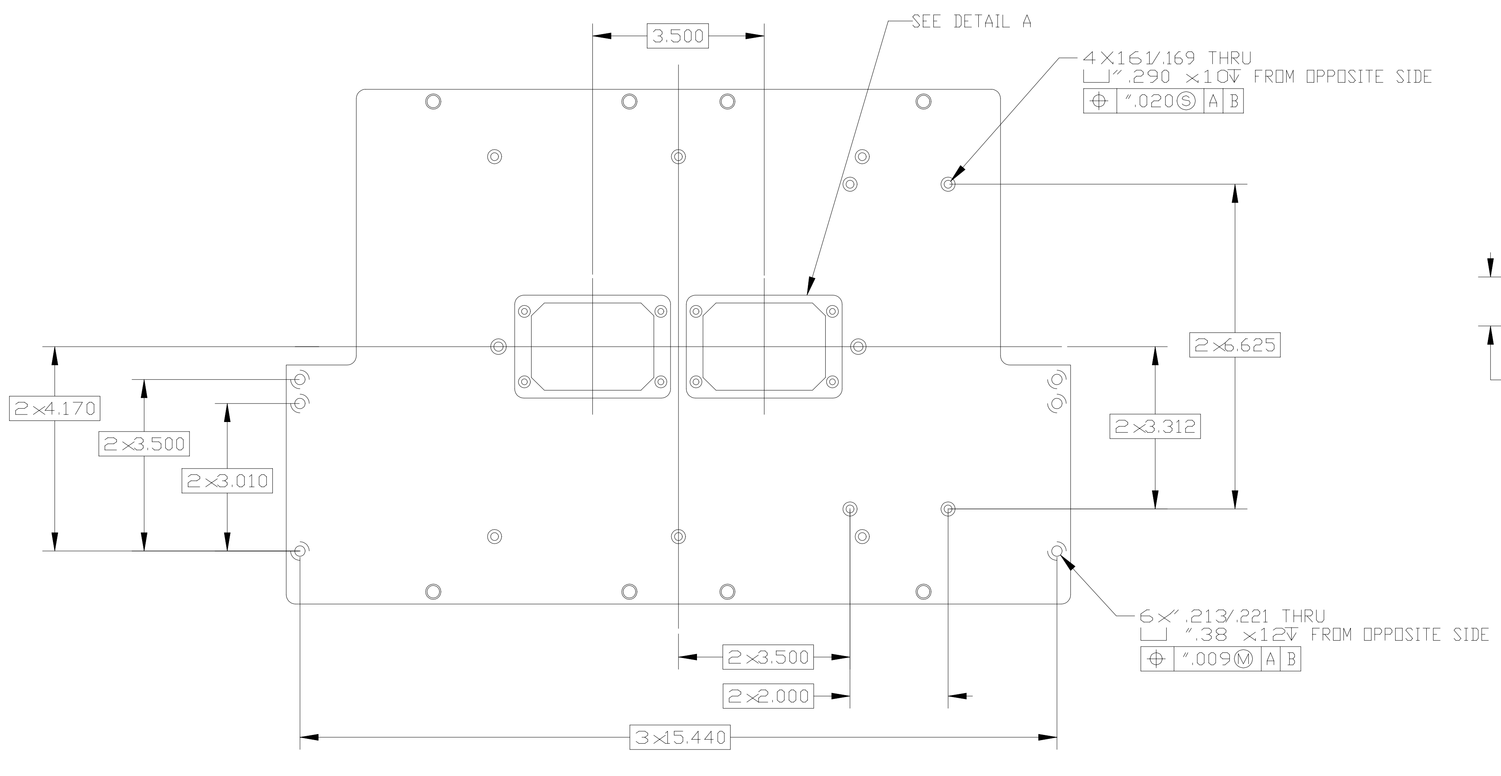

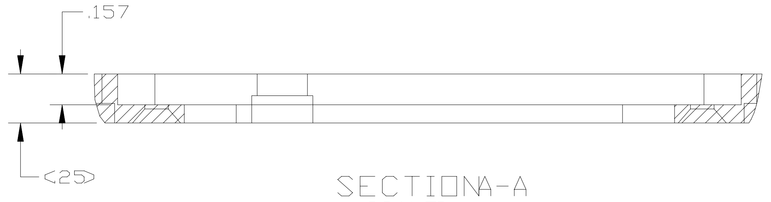

SECTION A-A
SCALE 2x
TYPICAL 2 PLACES

CHG	ZONE	DESCRIPTION	APP/DATE

REVISIONS

CHECK BOX WHEN UNDER CONFIGURATION CONTROL

THIRD ANGLE PROJECTION

CAD DRAWING
DO NOT REVISE MANUALLY

DESIGN CONTRACTOR

NATIONAL AERONAUTICS AND SPACE ADMINISTRATION
JOHN GLENN RESEARCH CENTER
LEWIS FIELD, CLEVELAND, OHIO

CONTRACT NUMBER:

FDC FEDERAL DATA CORPORATION

UNLESS OTHERWISE SPECIFIED
1. ALL DIMENSIONS ARE IN IN./LBS.
2. BREAK EDGES .010
3. TOLERANCES:
.X ± .03
.XX ± .010
.XXX ± .005
4. ANGULAR TOLERANCE 0°30'

DRAFTER	R. PUDOKA	STRUCTURE	
DESIGNER	R. PUDOKA	MAT'L PROC	
REVIEWER		CONFIG MGT	
ENGINEER			

DIMENSIONS AND TOLERANCING PER ASME Y14.5M-1994

PRO/ENGINEER2000i
PDM MDL RELEASE LEVEL:
PDM MDL REVISION:
MODEL:FSAP_BASE

TITLE: FSAP BASEPLATE

NEXT ASS'Y: FSAP BASEPLATE ASSEMBLY 67213MPAF40001

SIZE	CAGE CODE	DRAWING NUMBER	REV
D		67213MPDF40000-A	
SCALE 0.500		RELEASE DATE 9-15-99	SHEET 1 OF 1
			UNITS INCHES

SCALE 0.500