PART ID	QTY	PART DESCRIPTION	PART NO.	SOURCE OF SUPPLY
1	1	PI ADAPTOR PLATE ASSEMBLY	67213MPAF45500	N/A
2	1	PI BASE PLATE ASSEMBLY	67213MPAF45400	N/A
3	102	#6 PLAIN FLAT WASHER MATERIAL: CRES	NAS620C6	BUCKEYE AERO
4	4	".138-32 UNRC-3A X .75 LONG SCREW, SOCKET HEAD CAP MATERIAL: CRES	NAS1352C06-12	BUCKEYE AERO
5	6	PI CAGE SUPPORT 1	67213MPDF45010	N/A
6	4	".138-32 UNC-2B HEX NUT MATERIAL: CRES	NAS671C6	BUCKEYE AERO
7	1	PI LEFT SIDE PANEL	67213MPDF45003	N/A
8	34	".138-32 UNRC-3A X .375 LONG SCREW, SOCKET HEAD CAP MATERIAL: CRES	NAS1352C06-6	BUCKEYE AERO
9	1	CIRCULAR CONNECTOR		ITT CANNON
10	1	PI REAR PANEL	67213MPDF45002	N/A
11	60	".138-32 UNRC-3A X .50 LONG SCREW, SOCKET HEAD CAP MATERIAL: CRES	NAS1352C06-8	BUCKEYE AERO
12	4	PI EMI GASKET	67213MPDF45016	N/A
13	4	PI EMI SHIELD	67213MPDF45015	N/A
14	4	PI EMI RETAINER	67213MPDF45014	N/A
15	1	PI COVER ASSEMBLY	67213MPAF45100	N/A
16	1	PI CARD CAGE ASSEMBLY	67213MPAF45300	N/A
17	1	PI POWER RACK ASSEMBLY	67213MPAF45200	N/A
18	1	PI CAGE SUPPORT 3	67213MPDF45012	N/A
19	2	PI CAGE SUPPORT 2	67213MPDF45011	N/A
20	4	".112-40 UNC-2B HEX NUT MATERIAL: CRES	NAS671C4	BUCKEYE AERO
21	8	#4 PLAIN FLAT WASHER MATERIAL: CRES	NAS620C4	BUCKEYE AERO
22	1	CIRCULAR CONNECTOR		ITT CANNON
23	1	PI RIGTH SIDE PANEL	67213MPDF45004	N/A
24	4	".112-40 UNRC X .625 LONG SCREW, SOCKET HEAD CAP MATERIAL: CRES	NAS1352C04-10	BUCKEYE AERO
25	1	HERMETIC LED	HLMP-0581	HEWLETT PACKARD
26	1	LOW POWER CIRCUIT BREAKER	MIL-C-39019	
27	1	PI FRONT PANEL	67213MPDF45001	N/A
28	6	".138-32 UNRC-3A X .25 LONG SCREW, SOCKET HEAD CAP MATERIAL: CRES	NAS1352C06-4	BUCKEYE AERO

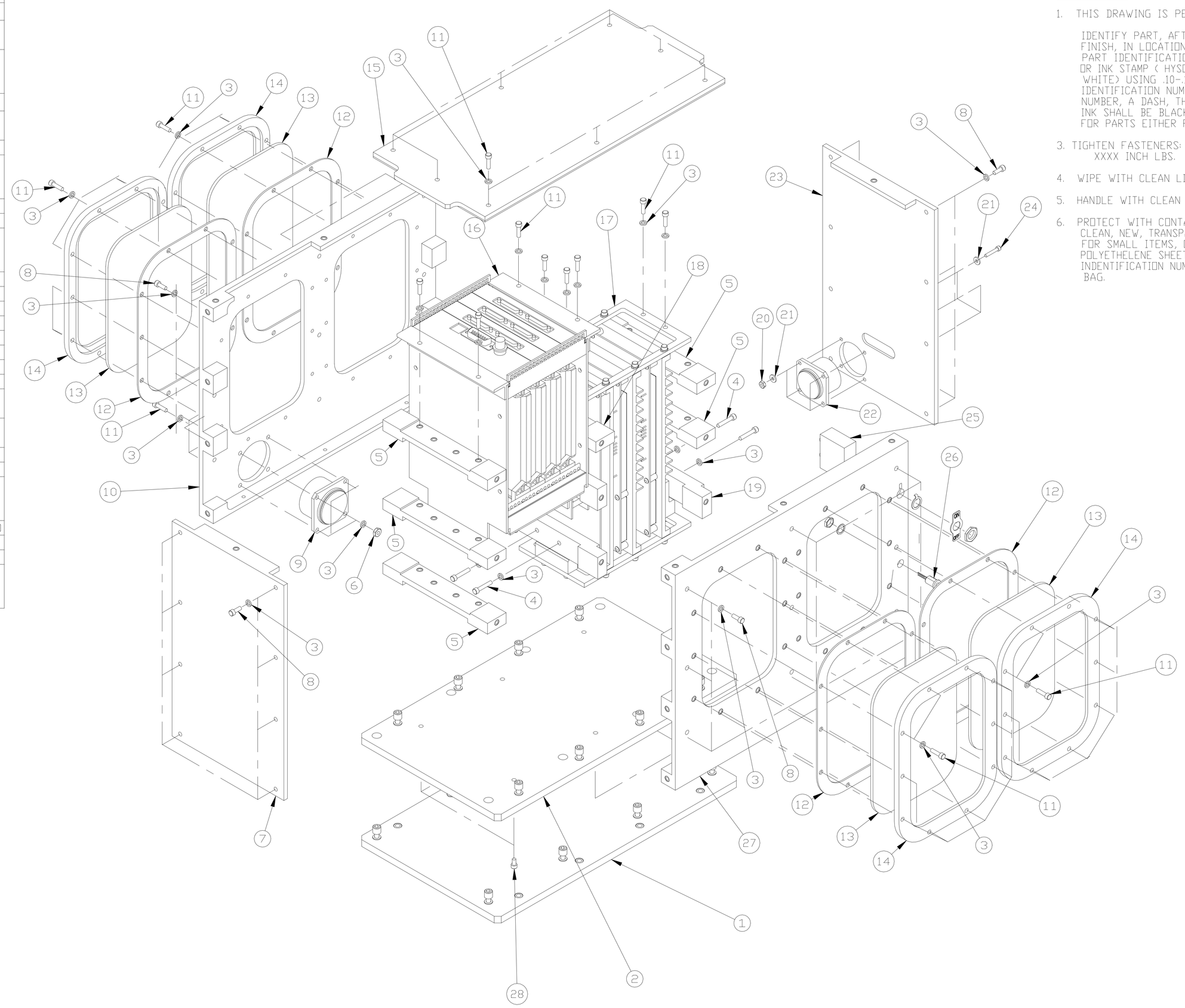

NOTES:

1. THIS DRAWING IS PER ANSI/ASME Y14.5M-1994.

   IDENTIFY PART, AFTER APPLICATION OF SURFACE FINISH, IN LOCATION SHOWN, AS FOLLOWS: ENGRAVE PART IDENTIFICATION NUMBER (.030 DEEP MAX.) OR INK STAMP (HYSOL # MON-WA BLACK OR #M9N-WA WHITE) USING .10-.12 TALL CHARACTERS. PART IDENTIFICATION NUMBER SHALL INCLUDE THE DRAWING NUMBER, A DASH, THEN THE SERIAL NUMBER. COLOR OF INK SHALL BE BLACK FOR MOST PARTS, AND WHITE FOR PARTS EITHER PAINTED OR ANODIZED BLACK.

3. TIGHTEN FASTENERS:
   XXXX INCH LBS.

4. WIPE WITH CLEAN LINT FREE CLOTH.

5. HANDLE WITH CLEAN LINT FREE GLOVES.

6. PROTECT WITH CONTAMINATION BARRIER. USE CLEAN, NEW, TRANSPARENT POLYETHELENE BAG FOR SMALL ITEMS, OR 4 MIL THICK (MINIMUM) POLYETHELENE SHEET. SEAL AND MARK WITH INDENTIFICATION NUMBER ON TAG ATTACHED TO BAG.

CHG	ZONE	DESCRIPTION	APP/DATE

REVISIONS

CHECK BOX WHEN UNDER CONFIGURATION CONTROL

THIRD ANGLE PROJECTION

CAD DRAWING DO NOT REVISE MANUALLY

DESIGN CONTRACTOR

NATIONAL AERONAUTICS AND SPACE ADMINISTRATION JOHN GLENN RESEARCH CENTER LEWIS FIELD, CLEVELAND, OHIO

CONTRACT NUMBER:

FDC FEDERAL DATA CORPORATION

UNLESS OTHERWISE SPECIFIED

1. ALL DIMENSIONS ARE IN IN/LBS
2. BREAK EDGES .010
3. TOLERANCES:
   .X ± .03
   .XX ± .010
   .XXX ± .005
4. ANGULAR TOLERANCE 0°30'

DRAFTER			STRUCTURE		
DESIGNER	C. HOLMES		MAT'L PROC		
REVIEWER			CONFIG MGT		
ENGINEER					

DIMENSIONS AND TOLERANCING PER ASME Y14.5M-1994

PRO/ENGINEER2000i
PDM MDL RELEASE LEVEL:
PDM MDL REVISION:
MODEL:PI_SECT_FSAP

TITLE: PI SECTION FSAP ASSEMBLY

NEXT ASS'Y

SIZE	CAGE CODE	DRAWING NUMBER	REV
D			
SCALE 0.450		RELEASE DATE 2-11-00	SHEET 1 OF1
			UNITS INCHES