CREATION DATE 27-Sep-00
MODEL NAME REAR DRAWER STOP
DRAWING NAME 67213MMDF30016

NOTES:

1. DIMENSIONS IN ACCORDANCE WITH ANSI Y14.5M-1982 SPECIFICATION.
2. MAT'L: 6061-T6 ALUMINUM ALLOY PER QQA 250/11.
3. GOLD ANODIZE PER MIL-A-8625, TYPE II, CLASS 2. DIMENSIONS APPLY AFTER ANODIZE.

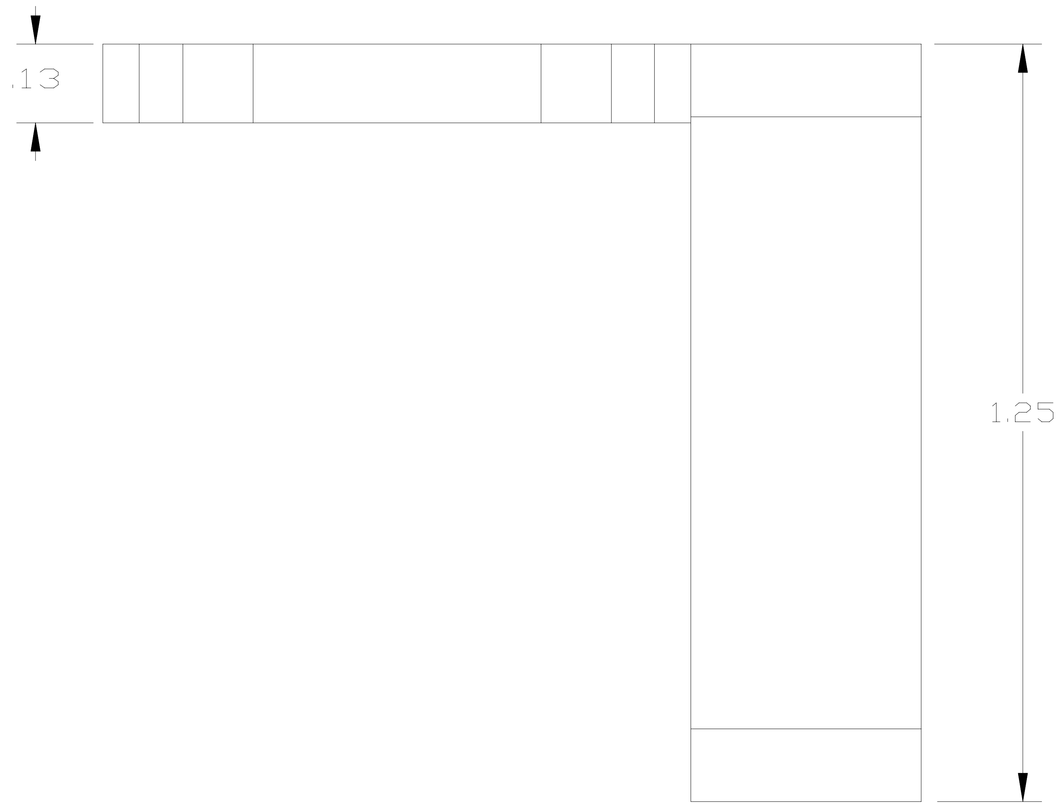

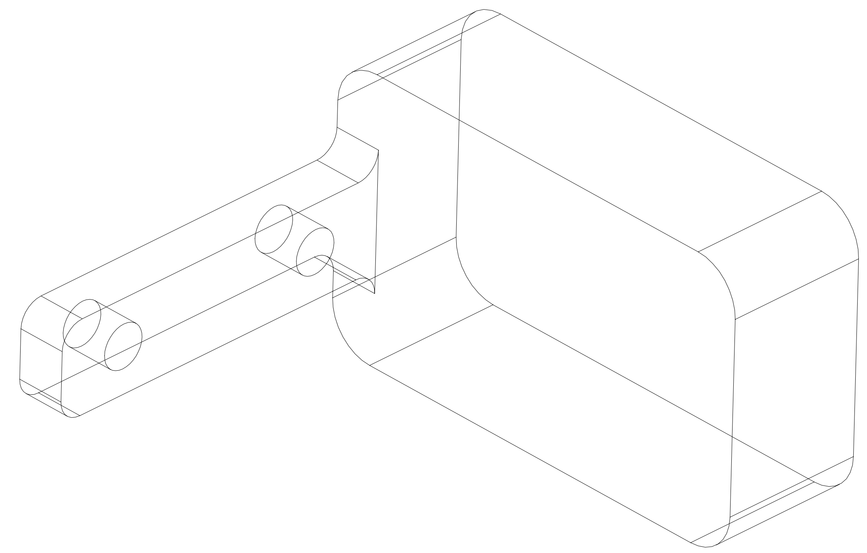

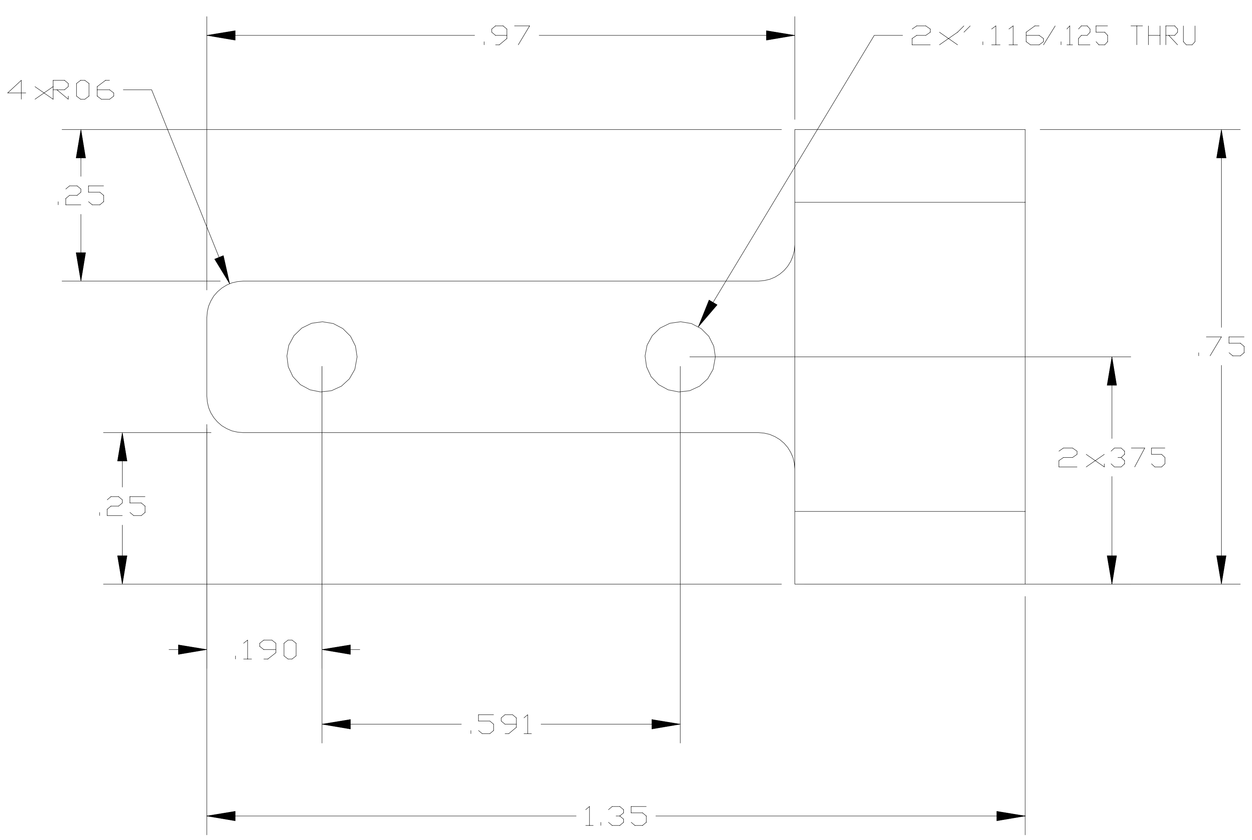

CHG	ZONE	DESCRIPTION	APP/DATE

REVISIONS

CHECK BOX WHEN UNDER CONFIGURATION CONTROL

THIRD ANGLE PROJECTION

CAD DRAWING DO NOT REVISE MANUALLY

DESIGN CONTRACTOR

NATIONAL AERONAUTICS AND SPACE ADMINISTRATION JOHN GLENN RESEARCH CENTER LEWIS FIELD, CLEVELAND, OHIO

CONTRACT NUMBER:

FDC FEDERAL DATA CORPORATION

UNLESS OTHERWISE SPECIFIED

1. ALL DIMENSIONS ARE IN IN./LBS.
2. BREAK EDGED .010
3. TOLERANCES:
   .X ± .03
   .XX ± .010
   .XXX ± .005
4. ANGULAR TOLERANCE 0°30'

DRAFTER			STRUCTURE		
DESIGNER	R. PUDOKA		MAT'L PROC		
REVIEWER			CONFIG MGT		
ENGINEER	R. PUDOKA				

TITLE: REAR DRAWER STOP

NEXT ASS'Y: FIR ASSEMBLY 67213MMAF10000

DIMENSIONS AND TOLERANCING PER ASME Y14.5M-1994

PRINTED:

PRO/ENGINEER2000i
PDM MDL RELEASE LEVEL:
PDM MDL REVISION:
MODEL:REAR_DRAWER_STOP

SIZE	CAGE CODE	DRAWING NUMBER	REV
C		67213MMDF30016	
SCALE 2.000		RELEASE DATE 3-23-00	SHEET 1 OF1
			UNITS INCHES