CREATION DATE 19-Sep-00
MODEL NAME 67213MMDF20212
DRAWING NAME 67213MMDF20212

NOTES:

1.) THIS DRAWING IS PER ASME Y14.5M-1994.

2.) MATERIAL: TYPE 303 STAINLESS STEEL.

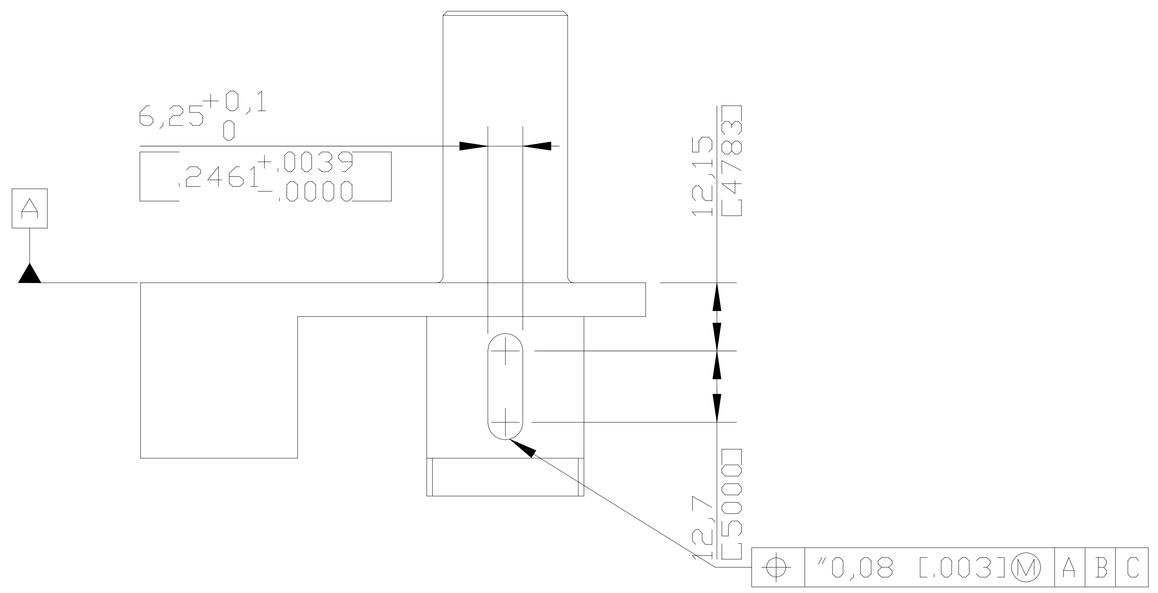

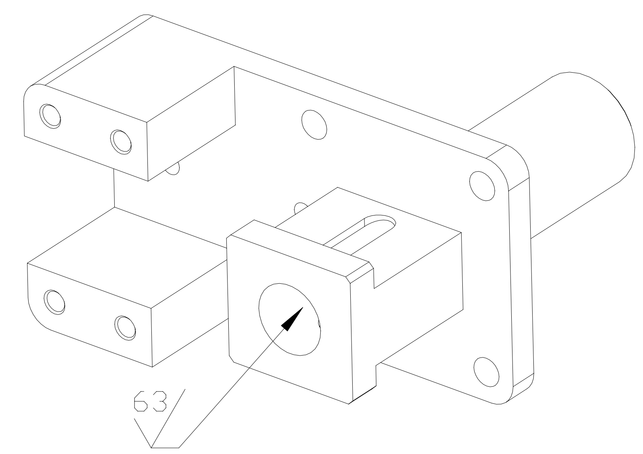

SCALE 1:1

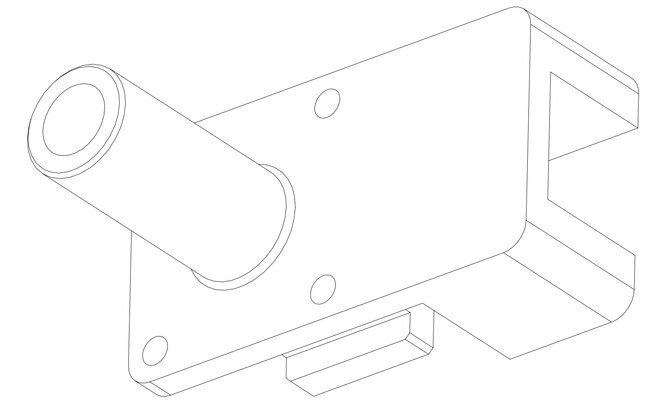

SCALE 1:1

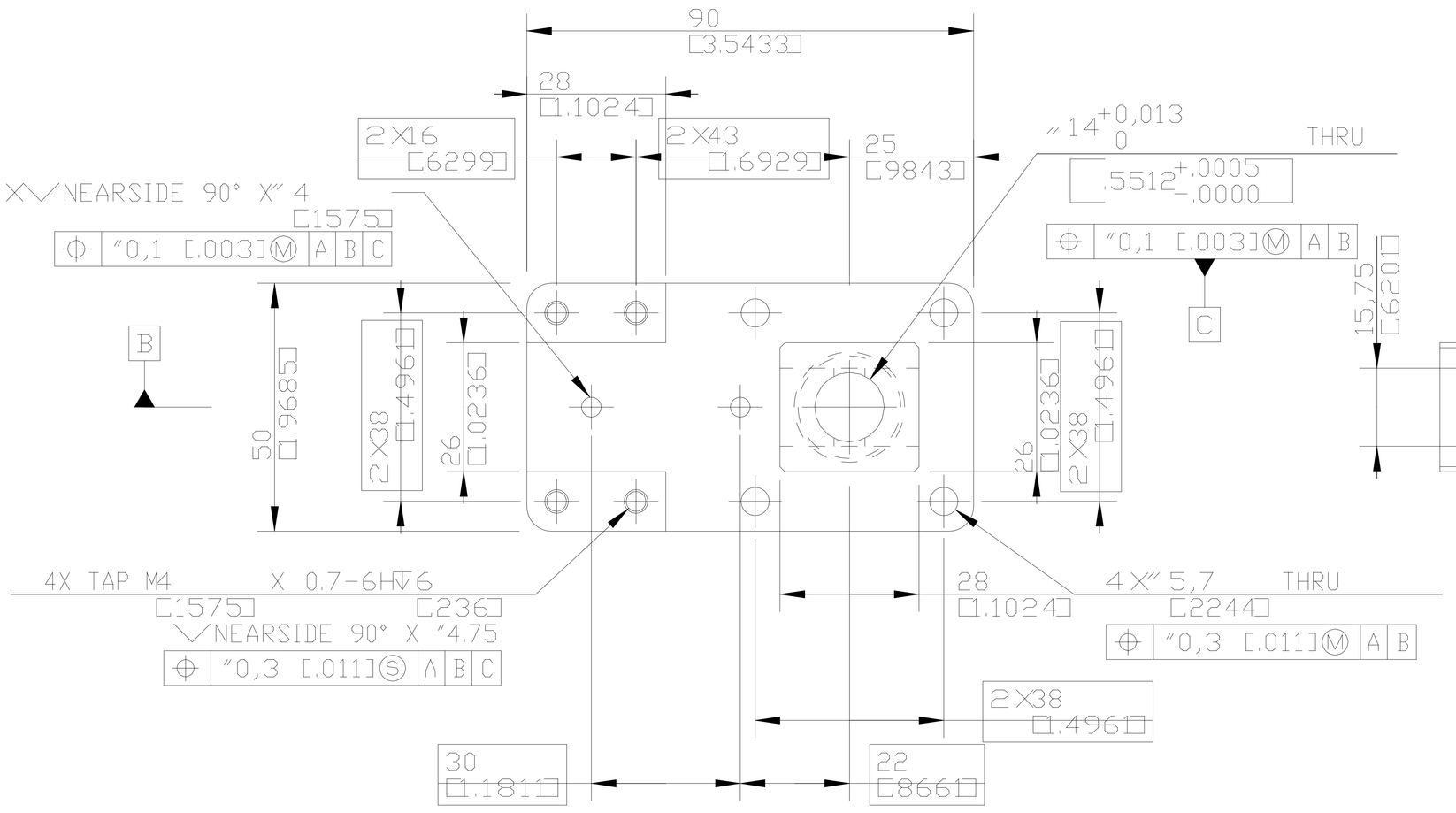

SCALE 1:1

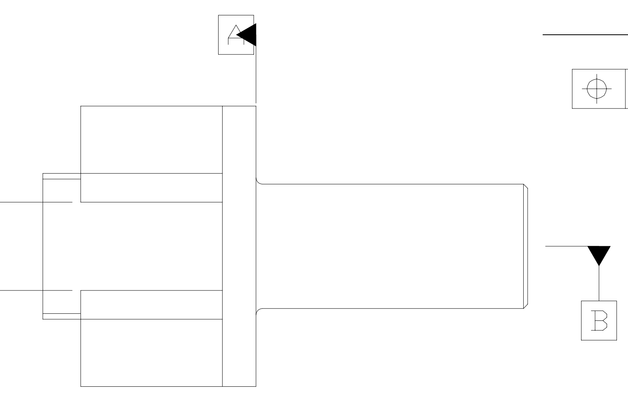

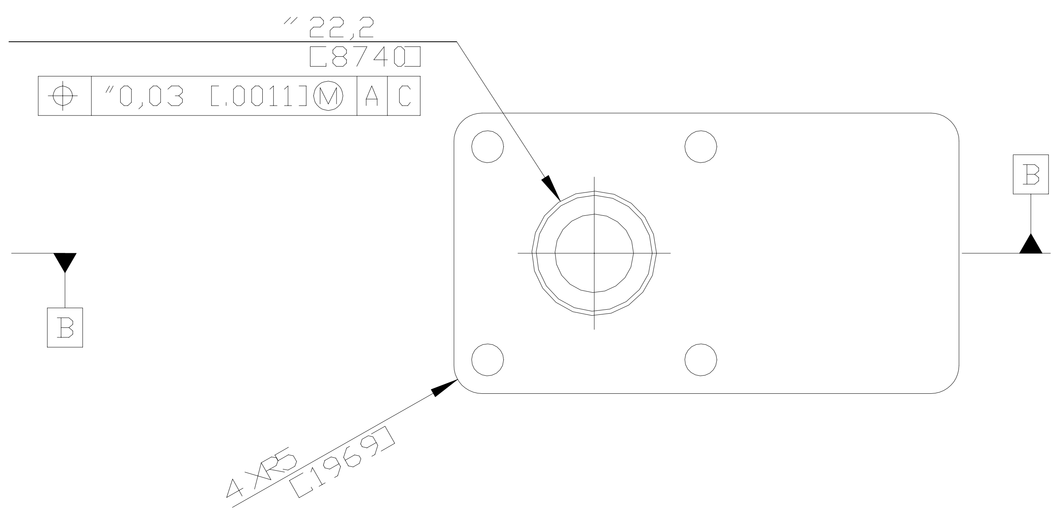

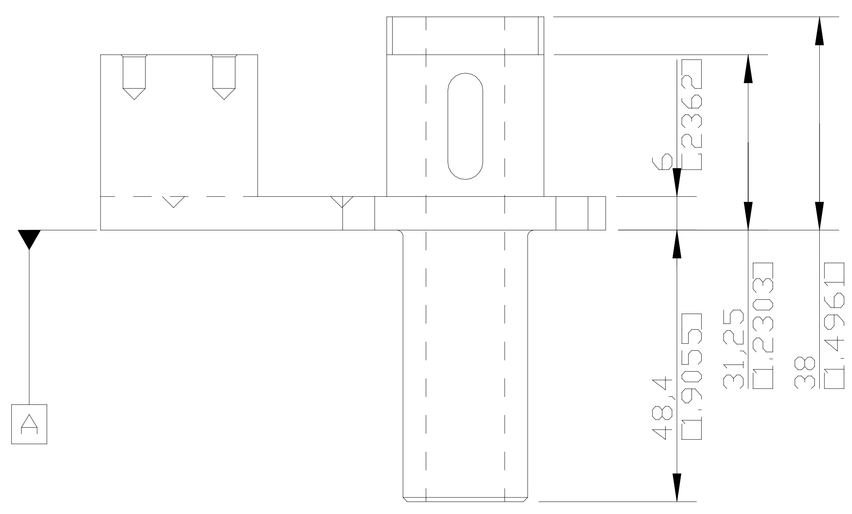

CHG	ZONE	DESCRIPTION	APP/DATE
X2		RELEASE FOR FABRICATION	09-Nov-99
X1		RELEASE FOR REVIEW	18-Oct-99

REVISIONS

AUTHORIZED by CM when under FORMAL Configuration Control

THIRD ANGLE PROJECTION

CAD DRAWING DO NOT REVISE MANUALLY

DESIGN CONTRACTOR

NATIONAL AERONAUTICS AND SPACE ADMINISTRATION JOHN GLENN RESEARCH CENTER LEWIS FIELD, CLEVELAND, OHIO

CONTRACT NUMBER:

FDC FEDERAL DATA CORPORATION

UNLESS OTHERWISE SPECIFIED:
1. ALL DIMENSIONS ARE IN MM
2. BREAK EDGES 0.2 - 0.5
3. LINEAR TOLERANCES
0 TO 6 ± 0.1
OVER 6 TO 30 ± 0.2
OVER 30 TO 120 ± 0.3
OVER 120 TO 315 ± 0.5
OVER 315 TO 1000 ± 0.8
OVER 1000 TO 2000 ± 1.2
4. ANGULAR TOLERANCES 0°30'

DRAFTER	C. GRIFFITHS		STRUCTURE	
DESIGNER	D. DIELS		MAT'L PROC	
REVIEWER			CONFIG MGT	
ENGINEER	D. DIELS			

DIMENSIONS AND TOLERANCING PER ASME Y14.5M-1994

PRO/ENGINEER2000i
PDM MDL RELEASE LEVEL:
PDM MDL REVISION:
MODEL67213MMDF20212

FABRICATION DETAIL LOCKING PIN HOUSING

NEXT ASSY: FIR LOCKING PIN ASSEMBLY RIGHT 67213MMAF20040

SIZE	CAGE CODE	DRAWING NUMBER	REV.
A2		67213MMDF20212	X.2

SCALE	RELEASE DATE	SHEET	UNITS
1:1	10-18-99	1 OF1	MM