CREATION DATE	06-Sep-00
MODEL NAME	67213MMDF20156
DRAWING NAME	67213MMDF20156

1. MATERIAL: SERIES 300 STAINLESS STEEL.
2. DIMENSIONS AND TOLERANCING PER ISO.

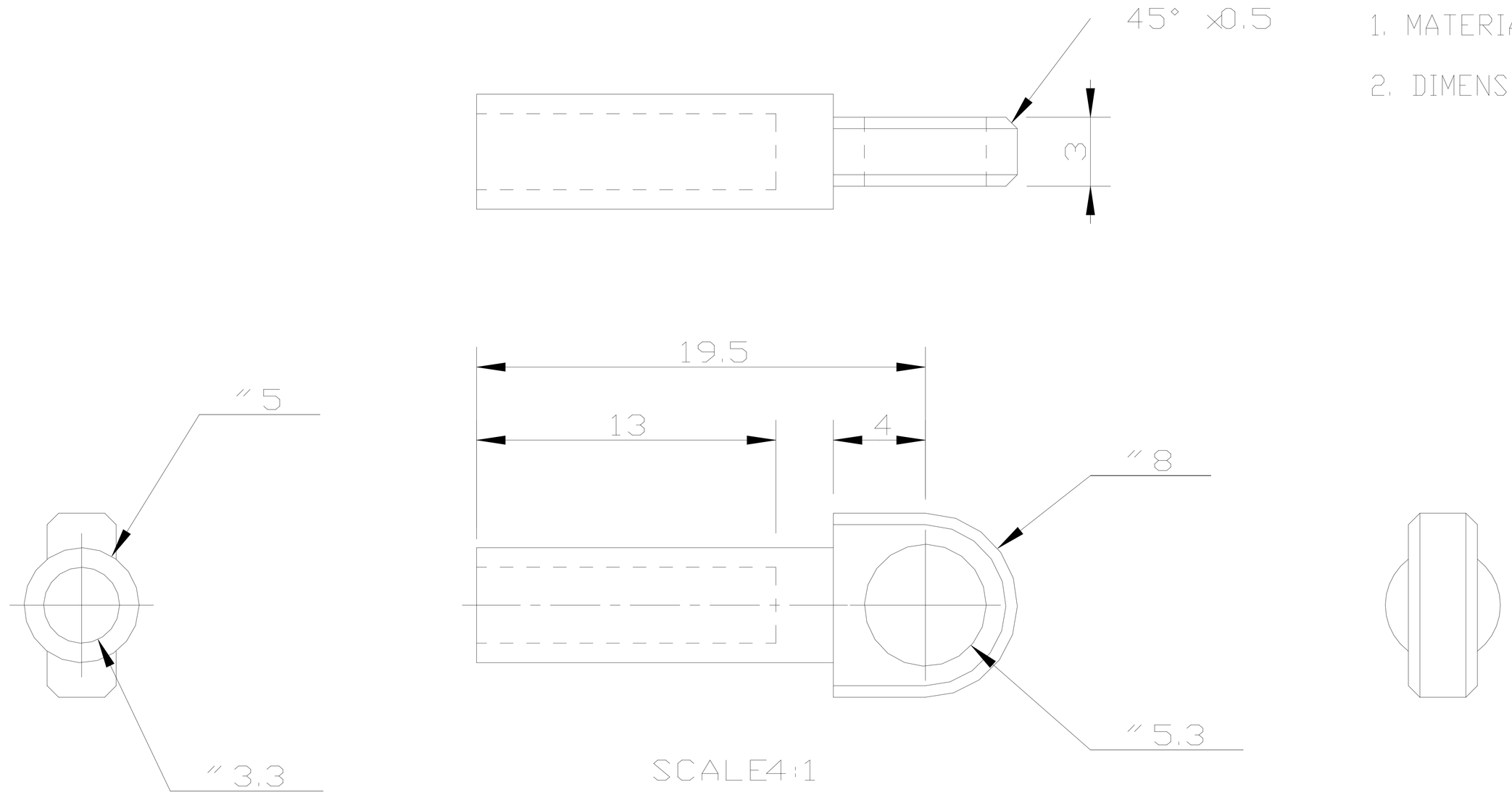

SCALE4:1

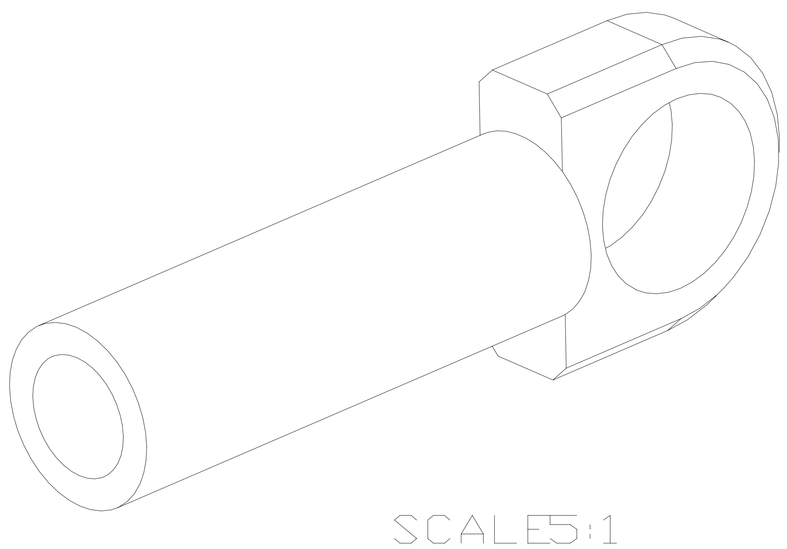

SCALE5:1

CHG	ZONE	DESCRIPTION	APP/DATE
X.1		RELEASED FOR REVIEW	2-26-99

REVISIONS

AUTHORIZED by CM when under FORMAL Configuration Control

THIRD ANGLE PROJECTION

CAD DRAWING DO NOT REVISE MANUALLY

DESIGN CONTRACTOR

NATIONAL AERONAUTICS AND SPACE ADMINISTRATION
JOHN GLENN RESEARCH CENTER
LEWIS FIELD, CLEVELAND, OHIO

CONTRACT NUMBER:

FDC FEDERAL DATA CORPORATION

UNLESS OTHERWISE SPECIFIED:
1. ALL DIMENSIONS ARE IN MM
2. BREAK EDGES 0.2 - 0.5
3. LINEAR TOLERANCES
   0 TO 6 ± 0.1
   OVER 6 TO 30 ± 0.2
   OVER 30 TO 120 ± 0.3
   OVER 120 TO 315 ± 0.5
   OVER 315 TO 1000 ± 0.8
   OVER 1000 TO 2000 ± 1.2
4. ANGULAR TOLERANCES 0°30'

DRAFTER	C GRIFFITH		STRUCTURE		
DESIGNER	C GRIFFITH		MAT'L PROC		
REVIEWER			CONFIG MGT		
ENGINEER					

DIMENSIONS AND TOLERANCING PER ASME Y14.5M-1994

PRO/ENGINEER2000i
PDM MDL RELEASE LEVEL:
PDM MDL REVISION:
MODEL67213MMDF20156

FABRICATION DETAIL SPRING RETAINER SLEEVE

NEXT ASSY: OPTICS BENCH ROTATIONAL BRAKE ASSEMBLY 67213MMAF20023

SIZE	CAGE CODE	DRAWING NUMBER	REV.
A3	4100-023	67213MMDF20156	X.1

SCALE	RELEASE DATE	SHEET	UNITS
3:1	2-26-99	1 OF1	MM