1. MATERIAL: SERIES 300 STAINLESS STEEL.
2. DIMENSIONS AND TOLERANCING PER ISO.

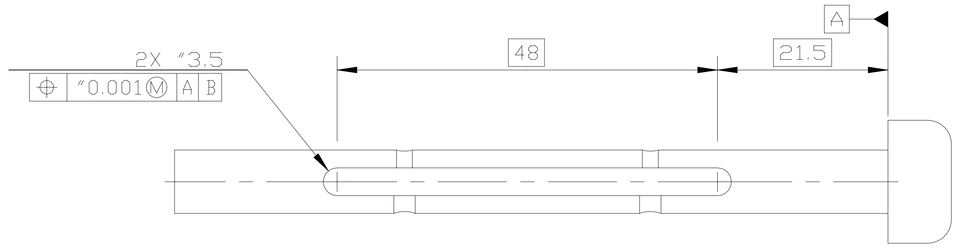

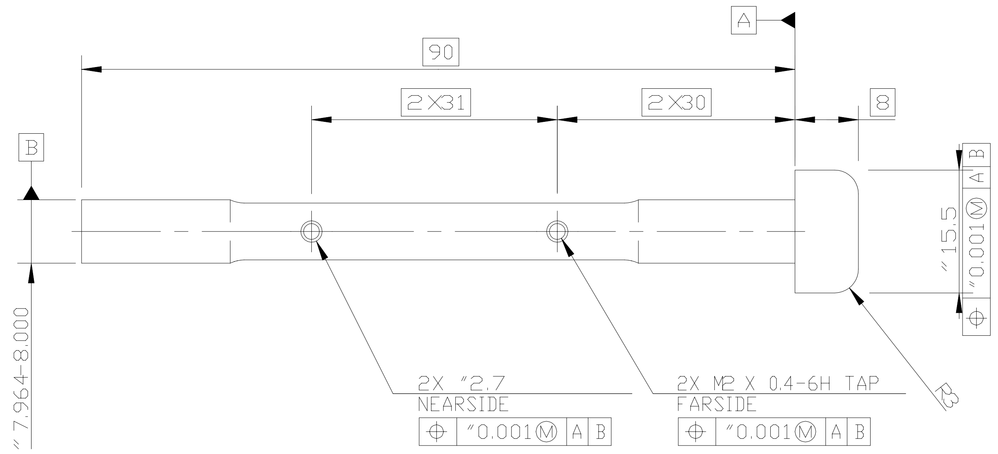

SCALE2:1

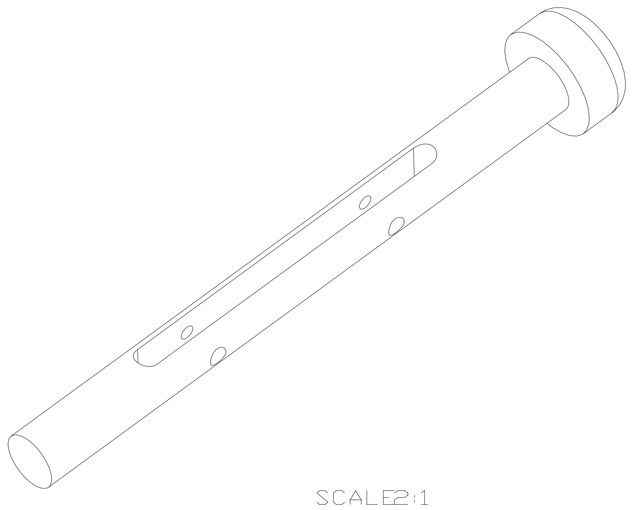

SCALE2:1

CHG	ZONE	DESCRIPTION	APP/DATE
X.1		RELEASED FOR REVIEW	5-17-99

REVISIONS

AUTHORIZED by CM when under FORMAL Configuration Control

THIRD ANGLE PROJECTION

CAD DRAWING DO NOT REVISE MANUALLY

DESIGN CONTRACTOR

NATIONAL AERONAUTICS AND SPACE ADMINISTRATION JOHN GLENN RESEARCH CENTER LEWIS FIELD, CLEVELAND, OHIO

CONTRACT NUMBER:

FEDERAL DATA CORPORATION

UNLESS OTHERWISE SPECIFIED:
1. ALL DIMENSIONS ARE IN MM
2. BREAK EDGES 0.2 - 0.5
3. LINEAR TOLERANCES
0 TO 6 ± 0.1
OVER 6 TO 30 ± 0.2
OVER 30 TO 120 ± 0.3
OVER 120 TO 315 ± 0.5
OVER 315 TO 1000 ± 0.8
OVER 1000 TO 2000 ± 1.2
4. ANGULAR TOLERANCES 0°30'

DRAFTER	C GRIFFITH		STRUCTURE	
DESIGNER	C GRIFFITH		MAT'L PROC	
REVIEWER			CONFIG MGT	
ENGINEER				

DIMENSIONS AND TOLERANCING PER ASME Y14.5M-1994

PRO/ENGINEER2000i
PDM MDL RELEASE LEVEL:
PDM MDL REVISION:
MODEL67213MMDF20145

FABRICATION DETAIL TRANSLATION BRAKE LOCKING PIN

NEXT ASSY: LEFT SIDE SLIDE TRANSLATION BRAKE HANDLE ASSEMBLY 67213MMAF20021

SIZE	CAGE CODE	DRAWING NUMBER	REV.
A1	4100-023	67213MMDF20145	X.1

SCALE	RELEASE DATE	SHEET	UNITS
1:1	5-17-99	1 OF1	MM

CREATION DATE: 01-Sep-00
DRW-ID: NAME 67213MMDF20145
DRAWING NAME: 67213MMDF20145