CREATION DATE: 31-AUG-00
MODEL NAME: 67213MMAF20030
DRAWING NAME: 67213MMAF20030

PART ID	QTY	PART DESCRIPTION	PART NO.
1	1	LOCKING PIN HOUSING	67213MMDF20200
2	1	LOCKING PIN YOKE	67213MMDF20201
3	1	PIN HOUSING COVER	67213MMDF20202
4	1	LOCKING PIN	67213MMDF20203
5	1	CAM PIN	67213MMDF20204
6	1	HANDLE PIVOT PIN	67213MMDF20205
7	1	LOCKING HANDLE	67213MMDF20206
8	1	M8 BALL PLUNGER	CARR LANE CLM-8-BP-3
9	1	TORSION SPRING	
10	1	C-CLIP	
11	1	M6 LOCKNUT	
12	4	M4 X 0.7-6G X 10mm SOCKET HEAD CAP SCREW	
13	4	M4 LOCKWASHER	
14	4	M4 FLATWASHER	

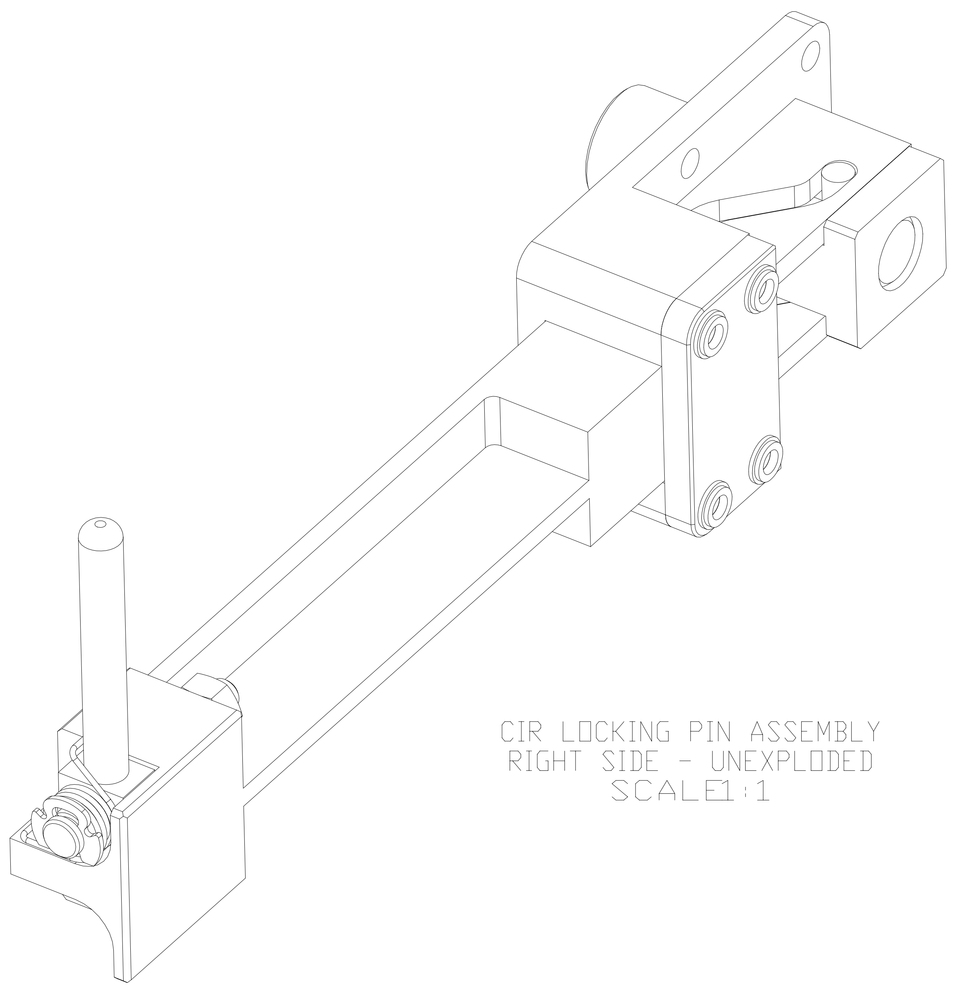

CIR LOCKING PIN ASSEMBLY
RIGHT SIDE - UNEXPLODED
SCALE1:1

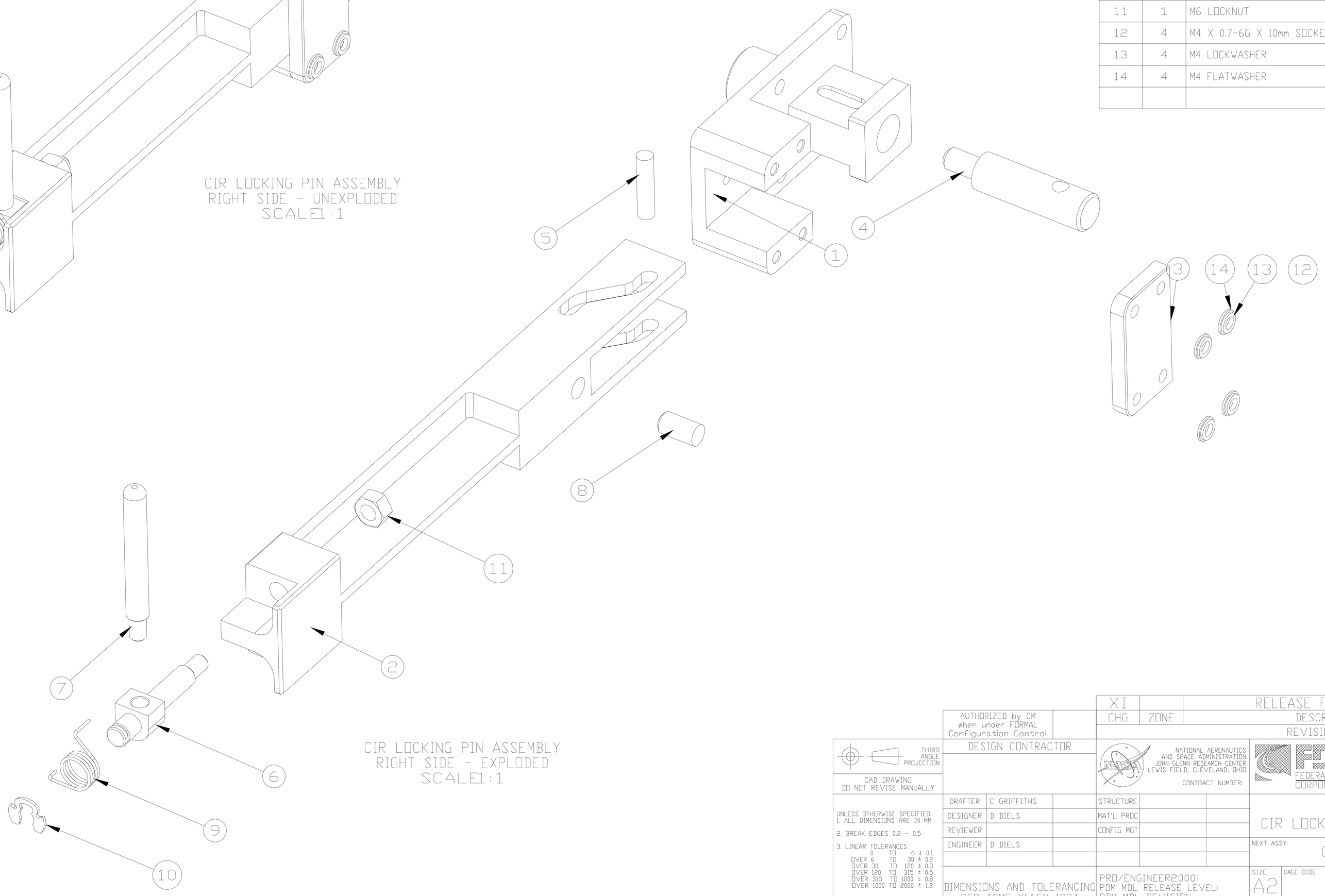

CIR LOCKING PIN ASSEMBLY
RIGHT SIDE - EXPLODED
SCALE1:1

CHG	ZONE	DESCRIPTION	APP/DATE
XI		RELEASE FOR REVIEW	10-18-99

REVISIONS

AUTHORIZED by CM when under FORMAL Configuration Control

DESIGN CONTRACTOR

THIRD ANGLE PROJECTION

CAD DRAWING DO NOT REVISE MANUALLY

NATIONAL AERONAUTICS AND SPACE ADMINISTRATION
JOHN GLENN RESEARCH CENTER
LEWIS FIELD, CLEVELAND, OHIO

CONTRACT NUMBER:

FDC FEDERAL DATA CORPORATION

UNLESS OTHERWISE SPECIFIED:
1. ALL DIMENSIONS ARE IN MM
2. BREAK EDGES 0.2 - 0.5
3. LINEAR TOLERANCES
0 TO 6 ± 0.1
OVER 6 TO 30 ± 0.2
OVER 30 TO 120 ± 0.3
OVER 120 TO 315 ± 0.5
OVER 315 TO 1000 ± 0.8
OVER 1000 TO 2000 ± 1.2
4. ANGULAR TOLERANCES 0°30'

DRAFTER	C GRIFFITHS	STRUCTURE		
DESIGNER	D DIELS	MAT'L PROC		
REVIEWER		CONFIG MGT		
ENGINEER	D DIELS			

DIMENSIONS AND TOLERANCING PER ASME Y14.5M-1994

PRO/ENGINEER2000i
PDM MDL RELEASE LEVEL:
PDM MDL REVISION:
MODEL67213MMAF20030

ASSEMBLY DETAIL
CIR LOCKING PIN ASSEMBLY - RIGHT

NEXT ASSY:
CIR MAIN ASSEMBLY

SIZE	CAGE CODE	DRAWING NUMBER	REV.
A2		67213MMAF20030	XI

SCALE	RELEASE DATE	SHEET	UNITS
1:2	10-18-99	1 OF1	MM