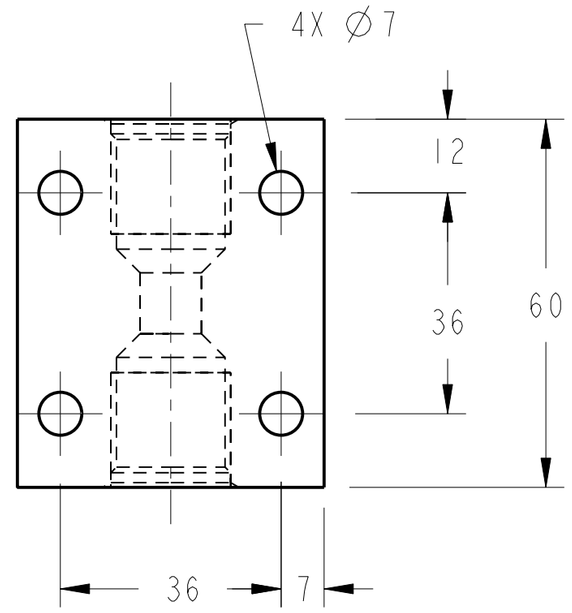

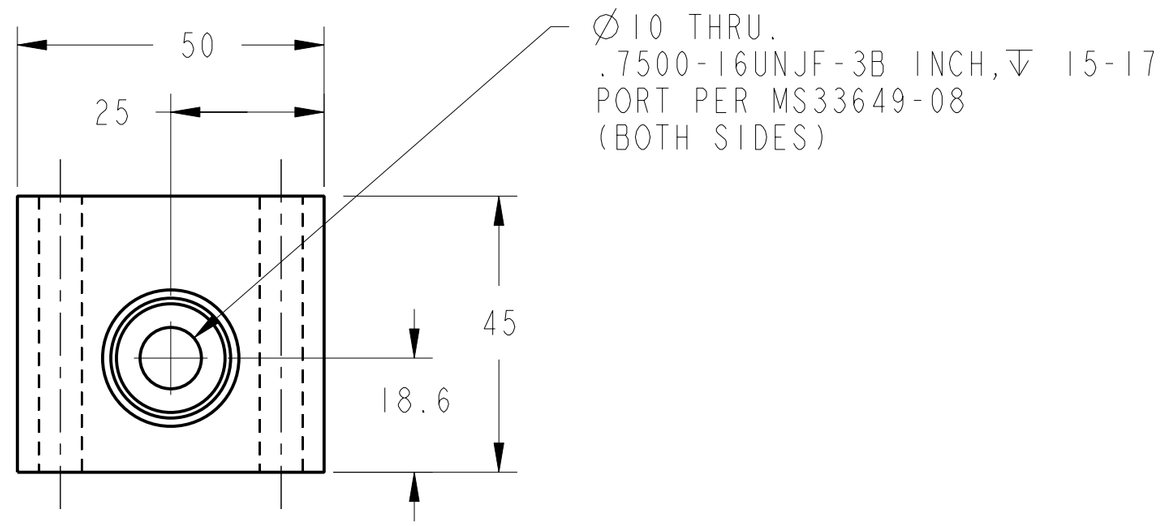

1. MATERIAL: TYPE 316 STAINLESS STEEL PER QQ-S-766
2. ULTRASONIC INSPECT PER MIL-STD-2154, PRIOR TO FABRICATION. ACCEPTANCE PER. SECTION 5.5.4, TABLE VI CLASS LEVEL A
3. 3.2 Ra ALL MACHINED SURFACES UNLESS OTHERWISE NOTED.
4. ALL OUTSIDE CORNERS TO BE R3
5. FINISHED PART MUST PASS DYE PENETRANT INSPECTION PER ASTM E1417. ACCEPTANCE PER MIL-STD-1907
6. CLEAN AND PASSIVATE PER MIL-S-5002 PARAGRAPHS 3.4.2.4 AND 3.4.2.4.1 AND QQ-P-35
7. CLEAN SURFACES WITH 190 PROOF ETHYL ALCOHOL. WIPE WITH CLEAN COTTON 5WD35 AND/OR LINT FREE CLOTH.

CHG	ZONE	DESCRIPTION	APP/DATE

REVISIONS

UNLESS OTHERWISE SPECIFIED:

1. ALL DIMENSIONING AND TOLERANCING PER ASME Y14.5M-1994
2. ALL DIMENSIONS ARE IN MILLIMETERS
3. BREAK EDGES: 0.2-0.5
4. LINEAR TOLERANCES:
   - 0.5-6 ±0.1
   - OVER 6-30 ±0.2
   - OVER 30-120 ±0.3
   - OVER 120-315 ±0.5
   - OVER 315-1000 ±0.8
   - OVER 1000-2000 ±1.2
5. ANGULAR TOLERANCES: 0° 30′

CONTRACT	.
CONTRACTOR	ANALEX CORP.
TASK ORDER	.
DRAFTER	L.THOMAS
ENGINEER	D.CATALANO
DESIGNER	D.CATALANO

THIRD ANGLE PROJECTION

NATIONAL AERONAUTICS AND SPACE ADMINISTRATION
JOHN H. GLENN RESEARCH CENTER
LEWIS FIELD
CLEVELAND, OHIO

IRR - 8 PORT SIMULATOR

XXXXXXXXXXXX

FOMA BB OPTICS BENCH SIMULATOR

PDM REL LEVEL: - PDM REVISION: -

PDM DATABASE: -

MODEL NAME: 67212MGDM013

PRIOR TO USE VERIFY THE INTENDED PURPOSE IN PDM ("FOR" ATTRIBUTE)

SIZE	DRAWING NUMBER	REV	BLDG	AREA
A2	67212MGDM013	-	110	117

UNITS: mm

SCALE:	INITIAL REL DATE	SHEET	DISCIPLINE
1:1	04/12/2000	1 OF 1	MECH.

PRO/E VERSION: 20.0

REV -

DRAWING NUMBER 67212MGDM013

SIZE A2

NAME:EDJEN OBJECT:67212MGDM013 DATE:30-Oct-00 13:32:32