1. MATERIAL:
   TYPE 316 STAINLESS STEEL
   PER FEDERAL SPEC QQ-S-763.

2. 64 Ra ALL MACHINED SURFACES UNLESS OTHERWISE NOTED PER ANSI/ASME B46.1.

3. ELECTROCHEMICAL ETCH DRAWING PART NUMBER 67212MGDM008 ON SPECIFIED SURFACE PER SAE AS478, METHOD 7A (ZONE C7).

4. CLEAN SURFACES WITH 190 PROOF ETHYL ALCOHOL. WIPE WITH CLEAN COTTON SWABS AND/OR LINT-FREE CLOTH.

5. HANDLE WITH CLEAN, LINT-FREE GLOVES.

6. BEFORE STORAGE, PROTECT WITH CONTAMINATION BARRIER. USE CLEAN, NEW, TRANSPARENT, POLYETHYLENE BAG SEALED WITH FIBERGLASS PACKAGING TAPE. SEAL AND MARK WITH IDENTIFICATION NUMBER ON TAG ATTACHED TO BAG.

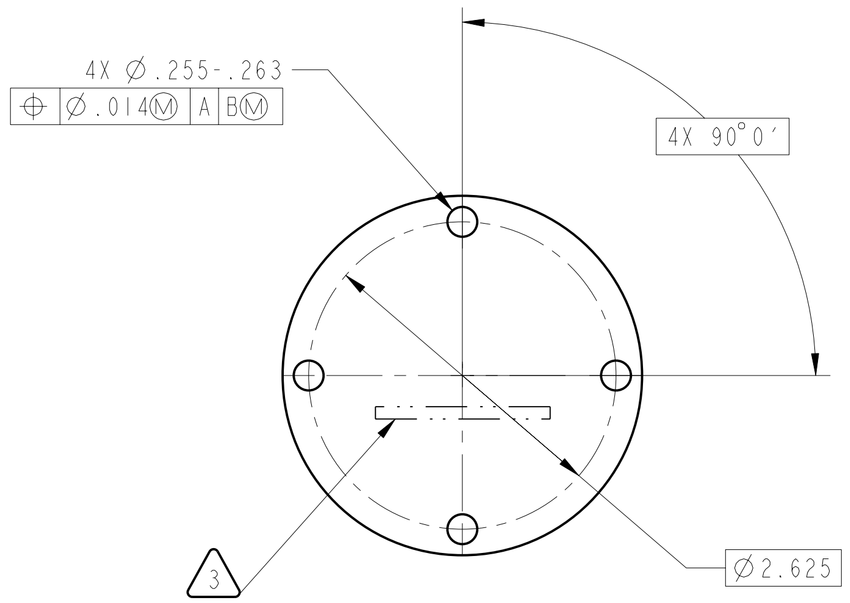

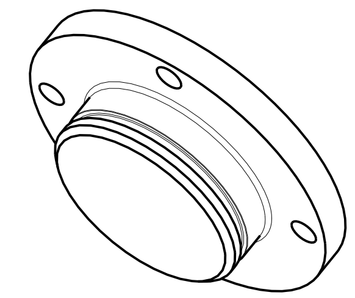

ISO VIEW

TANGENT EDGE LINES SHOWN

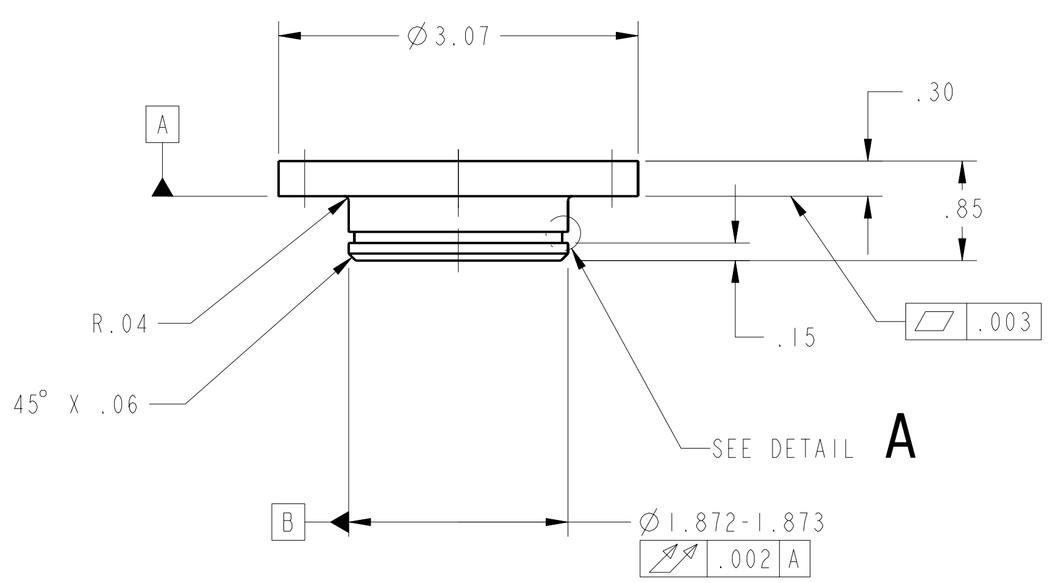

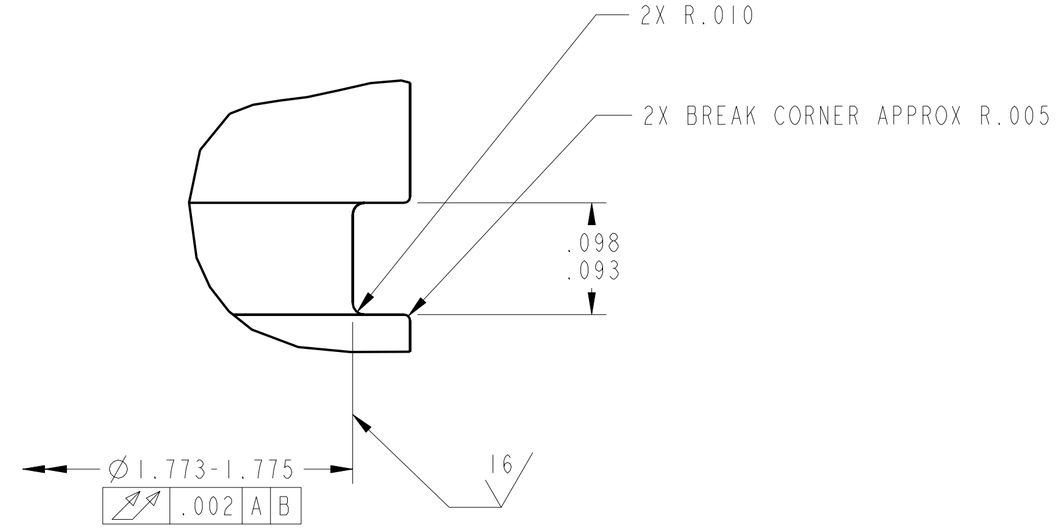

DETAIL A
SCALE 10/1

CHG	ZONE	DESCRIPTION	APP/DATE

REVISIONS

UNLESS OTHERWISE SPECIFIED DIMENSIONS ARE IN INCHES		CONTRACT	NAS3-27600
		CONTRACTOR	ADF INC.
TOLERANCE ON		TASK ORDER	060
.X	± 0.0	DRAFTER	ADF/W. HOLT
.XX	± 0.01	ENGINEER	ANLX/D. CATALANO
.XXX	± 0.005	DESIGNER	ADF/W. HOLT
FRACTION	± -	DIMENSIONING AND TOLERANCING PER ASME Y14.5M-1994	
ANGULAR	± 0.50°		
BREAK EDGES	.01-.02		

NATIONAL AERONAUTICS AND SPACE ADMINISTRATION
JOHN H. GLENN RESEARCH CENTER
LEWIS FIELD
CLEVELAND, OHIO

FCF CHAMBER/EXHAUST VENT MANIFOLD HYDROTEST

(008) 1/2" VALVE BLANK BODY PLUG-INLET

PDM REL LEVEL: RELEASE PDM REVISION: -.1

PDM DATABASE: FCF
MODEL NAME: 67212MGDM008
PRIOR TO USE VERIFY THE INTENDED PURPOSE IN PDM ("FOR" ATTRIBUTE)

SIZE	DRAWING NUMBER	REV	BLDG	AREA
D	67212MGDM008	-	110	-
			UNITS: INCH	
SCALE: 1/1	INITIAL REL DATE 07/12/99	SHEET 1 OF 1	DISCIPLINE PRO-E	

PRO/E VERSION: 19.0

SIZE D DRAWING NUMBER 67212MGDM008 REV -

NAME:FCF_VENT_MANIFOLD_67212MGDM008 DATE:99-07-12 13:32:10