1. MATERIAL:
   6061-T651 ALUMINUM PER FEDERAL
   SPEC QQ-A-250/11.
2. 1.6 Ra ALL OVER PER ANSI/ASME B46.1.
3. ALL INTERNAL FILLET RADII TO BE
   R6-6.5 UNLESS OTHERWISE NOTED.
4. BLACK ANODIZE PER MIL-A-8625, TYPE II,
   CLASS 2, BEFORE INSTALLING KEENSERTS.
5. INSTALL THREADED KEENSERTS PER
   MANUFACTURER'S SPECIFICATIONS
   AFTER SURFACE TREATMENT PER NOTE 3.
6. ELECTROCHEMICAL ETCH DRAWING PART NUMBER
   67212MGDM001 ON SPECIFIED SURFACE,
   PER SAE AS478, METHOD 7A (ZONE E9).
7. CLEAN SURFACES WITH 190 PROOF ETHYL
   ALCOHOL. WIPE WITH CLEAN COTTON SWABS
   AND/OR LINT-FREE CLOTH.
8. QUANTITY: ONE REQUIRED.

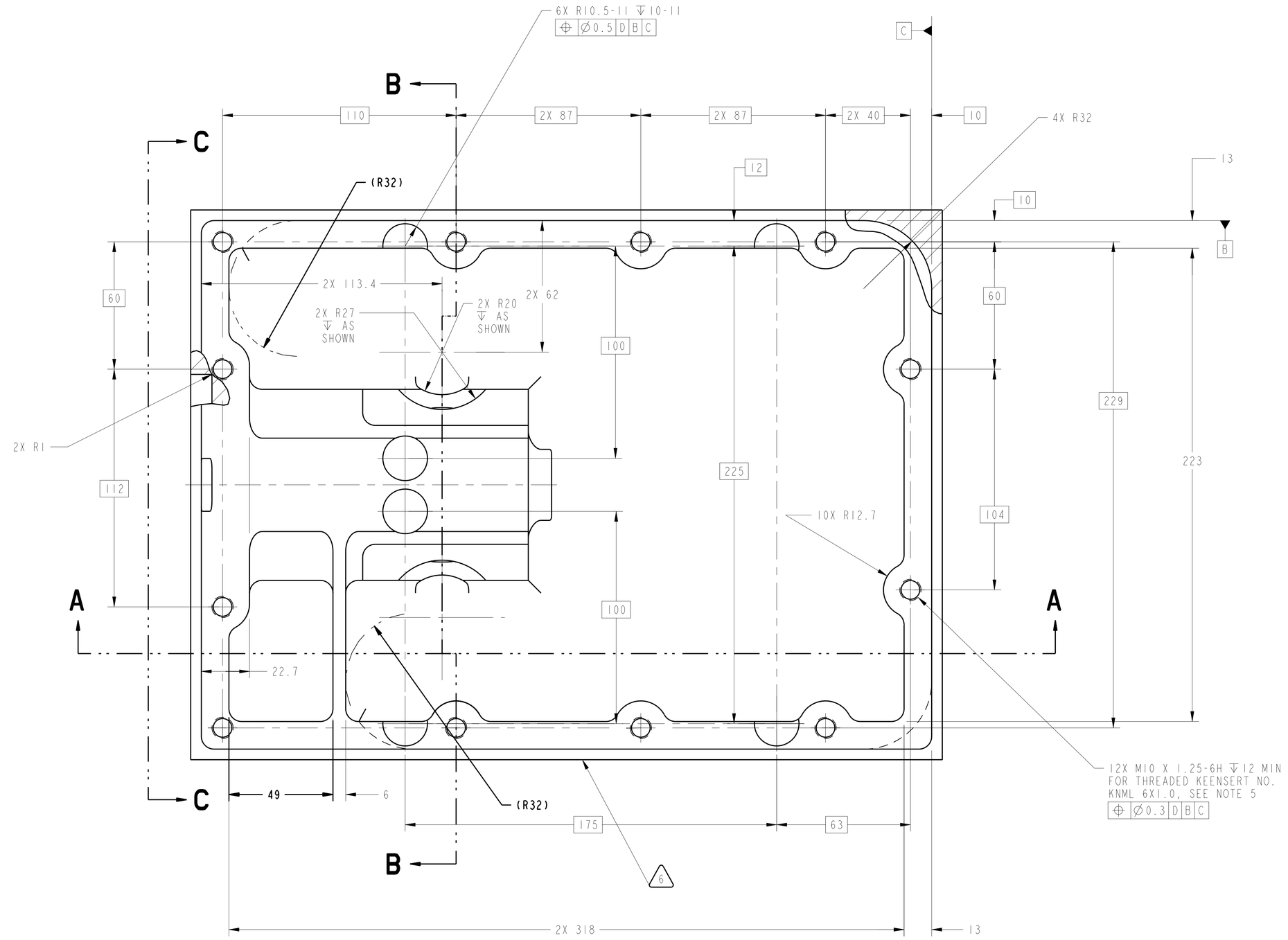

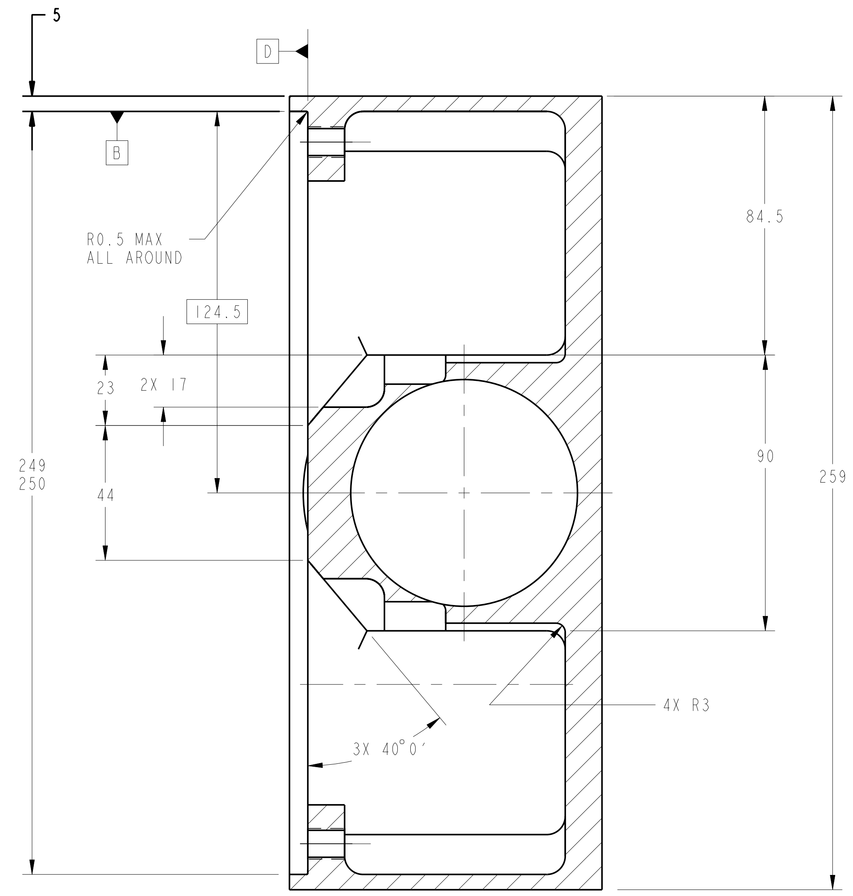

SECTION **B-B**

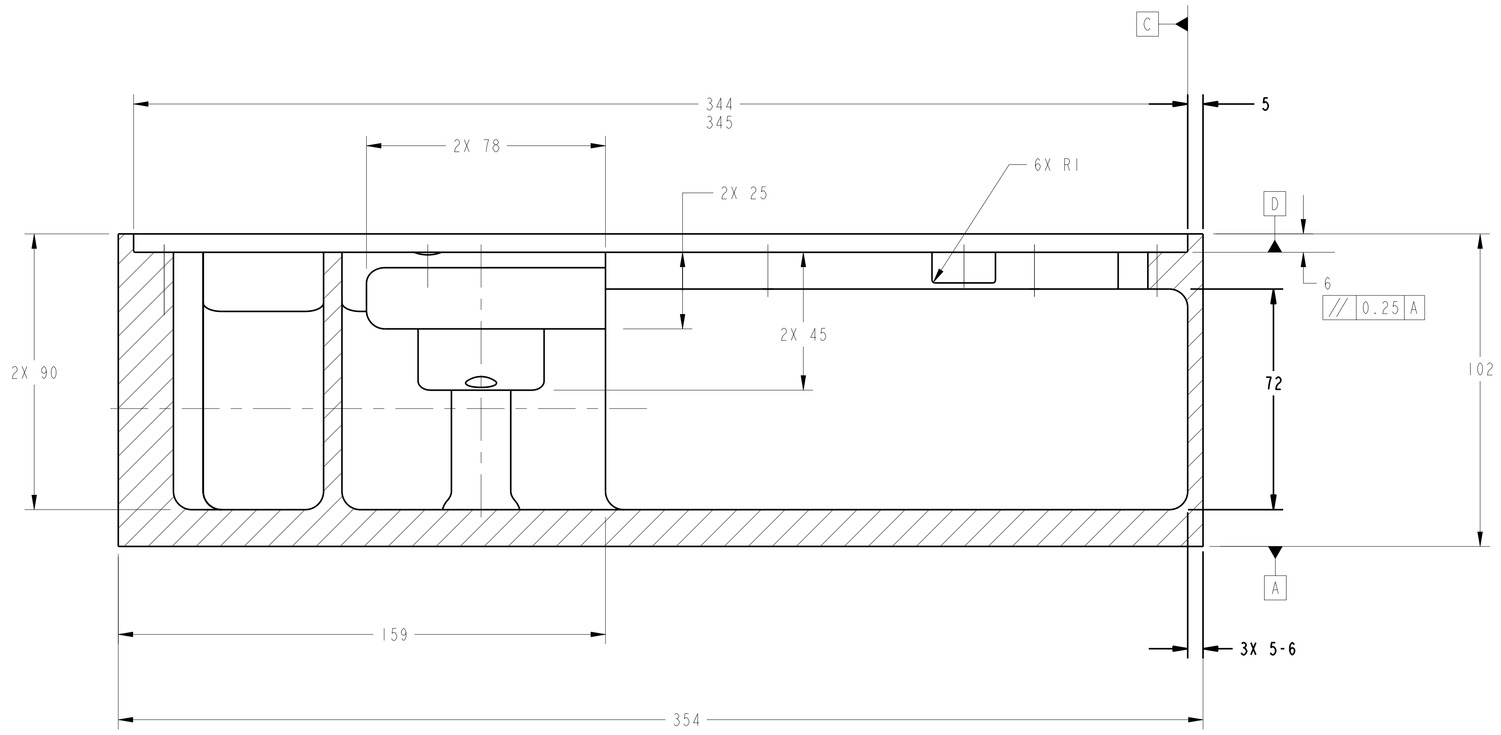

SECTION **A-A**

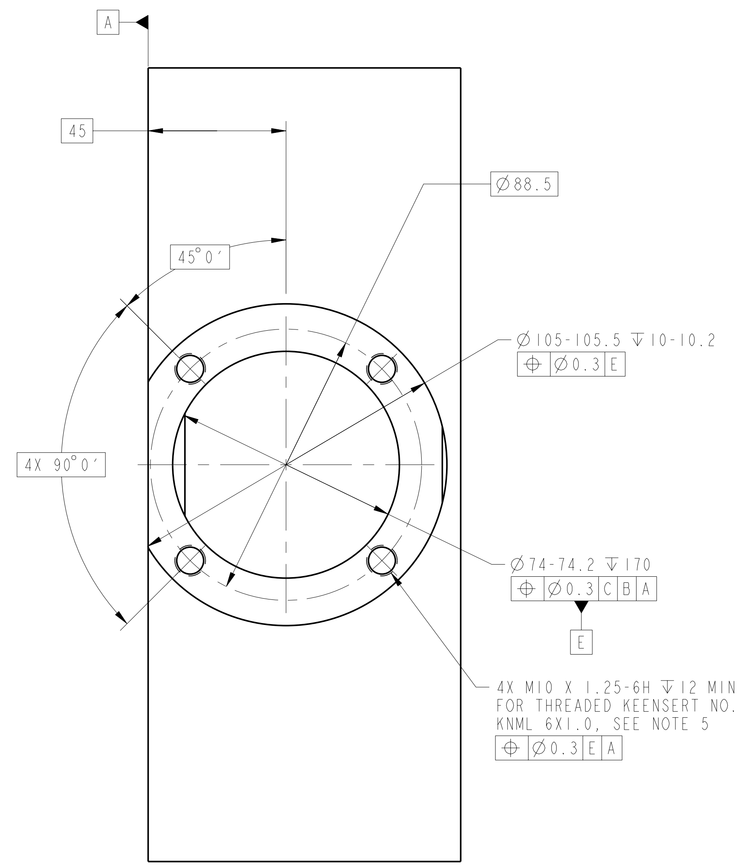

VIEW **C-C**

CHG	ZONE	DESCRIPTION	APP/DATE
A	G5	ADDED DIM 2X 17	DAR 06/24/98

REVISIONS

UNLESS OTHERWISE SPECIFIED:
1. ALL DIMENSIONING AND TOLLERANCING PER ASME Y14.5M-1994
2. ALL DIMENSIONS ARE IN MILLIMETERS
3. BREAK EDGES: 0.2-0.5
4. LINEAR TOLERANCES:
   0.5-6 ±0.1
   OVER 6-30 ±0.2
   OVER 30-120 ±0.3
   OVER 120-315 ±0.5
   OVER 315-1000 ±0.8
   OVER 1000-2000 ±1.2
5. ANGULAR TOLERANCES: 0° 30'

METRIC

THIRD ANGLE PROJECTION

DRAFTER	D.ROBINSON
DESIGNER	D.CATALANO
ENGINEER	D.CATALANO
MODEL NAME:	67212MGDM001
PROJE VERSION:	18.0
RELEASE DATE:	06/01/98

NATIONAL AERONAUTICS AND SPACE ADMINISTRATION
LEWIS RESEARCH CENTER
CLEVELAND, OHIO

001 MANIFOLD TEST FIXTURE BASE

MANIFOLD TEST FIXTURE ASSEMBLY
67212MGLM000

SIZE	DRAWING NUMBER	REV	STAT	BLDG/CELL
A0	67212MGDM001	X	R	333/-

SCALE: 1/1 SHEET 1 OF 1

DRAWING NUMBER 67212MGDM001

NAME:ED4EA ON:GC1-67212MGDM001 DATE:30-Oct-98 13:31:38