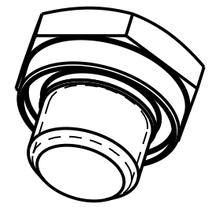

ISO VIEW
SCALE 1/1

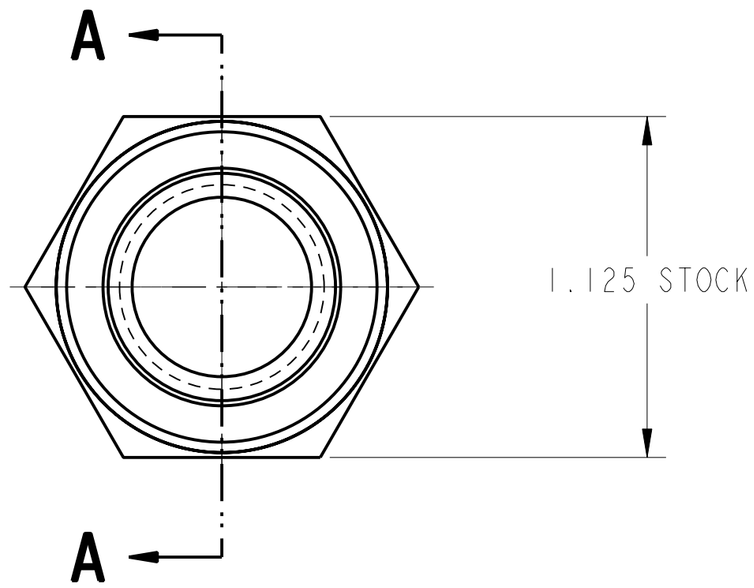

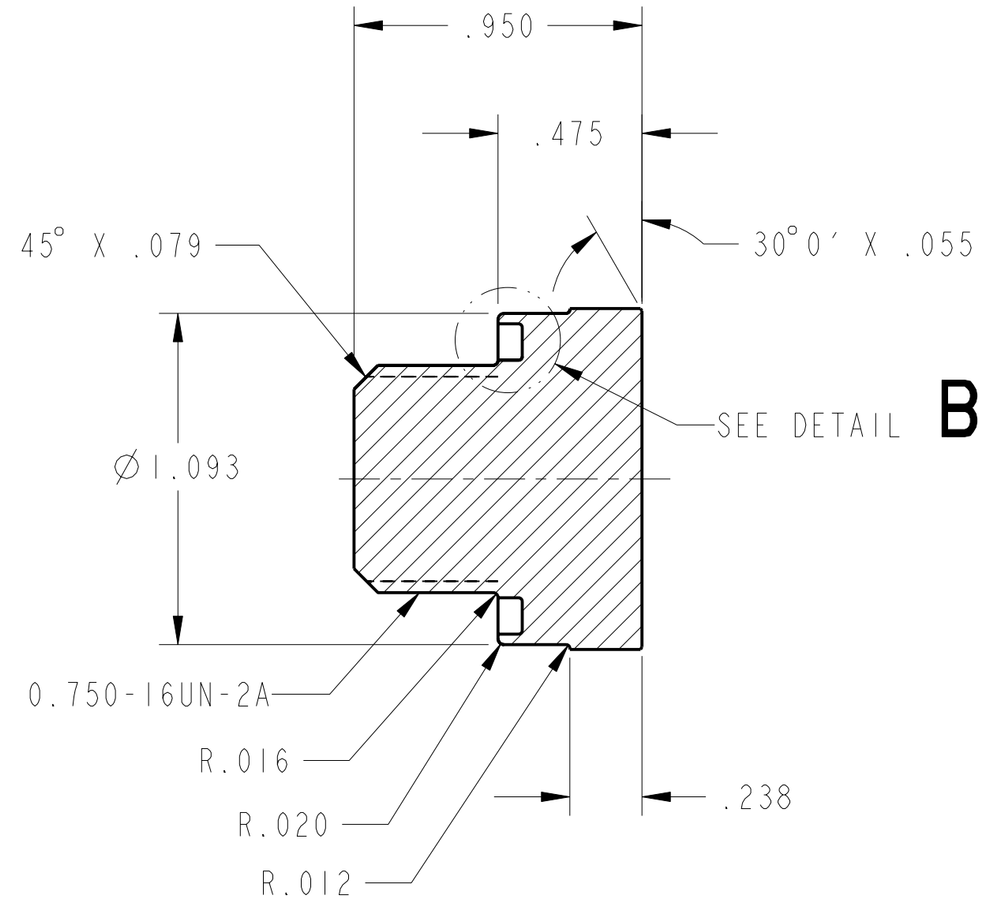

SECTION A-A

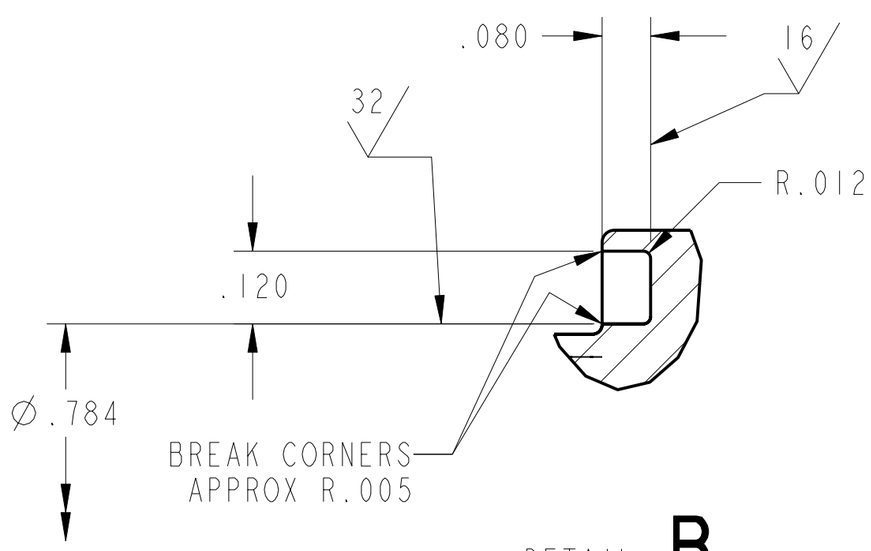

DETAIL B
SCALE 4/1

1. MATERIAL:
   304 STAINLESS STEEL PER FEDERAL SPEC QQ-S-766.
2. 63 Ra ALL OVER UNLESS OTHERWISE NOTED.
3. CLEAN AND PASSIVATE PER MIL-S-5002, PARAGRAPHS 3.4.2.4 AND 3.4.2.4.1 AND FEDERAL SPECIFICATION QQ-P-35.
4. CLEAN SURFACES WITH 190 PROOF ETHYL ALCOHOL. WIPE WITH CLEAN COTTON SWABS AND/OR LINT-FREE CLOTH.
5. HANDLE WITH CLEAN, LINT-FREE GLOVES.
6. BEFORE STORAGE, PROTECT WITH CONTAMINATION BARRIER. USE CLEAN, NEW, TRANSPARENT, POLYETHYLENE BAG FOR SMALL ITEMS, OR 4 MIL THICK MINIMUM POLYETHYLENE SHEET SEALED WITH FIBERGLASS PACKAGING TAPE. SEAL AND MARK WITH IDENTIFICATION NUMBER ON TAG ATTACHED TO BAG.
7. ESTIMATED WEIGHT: 0.186 lbs.

CHG	ZONE	DESCRIPTION	APP/DATE

REVISIONS

UNLESS OTHERWISE SPECIFIED DIMENSIONS ARE IN INCHES		CONTRACT	NAS3-27600
		CONTRACTOR	ADF, INC.
TOLERANCE ON		TASK ORDER	60
.X	± 0.0	DRAFTER	ADF/ M. AYNIK
.XX	± 0.01	ENGINEER	ANLX/ M. POLITI
.XXX	± 0.005	DESIGNER	ADF/ M. AYNIK
FRACTION	± -	DIMENSIONING AND TOLERANCING PER ASME Y14.5M-1994	
ANGULAR	± 0.50°		
BREAK EDGES	XXX		

PDM REL LEVEL: **RELEASE** PDM REVISION: **x.3**
PDM DATABASE: **FCF**
MODEL NAME: **67212MGDH004**
PRIOR TO USE VERIFY THE INTENDED PURPOSE IN PDM ("FOR" ATTRIBUTE)

NATIONAL AERONAUTICS AND SPACE ADMINISTRATION
JOHN H. GLENN RESEARCH CENTER
LEWIS FIELD
CLEVELAND, OHIO

IRR - PRESSURE TEST PROCEDURE
67212MELH200

004 PAVE VSI2 PORT HYDROSTATIC PLUG

SIZE	DRAWING NUMBER	REV	BLDG	AREA
C	67212MGDH004	-	333	-
			UNITS: INCH	
SCALE: 2/1 AND NOTED	INITIAL REL DATE XX/XX/XX	SHEET 1 OF 1	DISCIPLINE MECHANICAL	

PRO/E VERSION: 19.0

SIZE C DRAWING NUMBER 67212MGDH004 REV -

NAME: EDJEN OBJECT: 67212MGDH004 DATE: 30-Oct-00 13:30:50