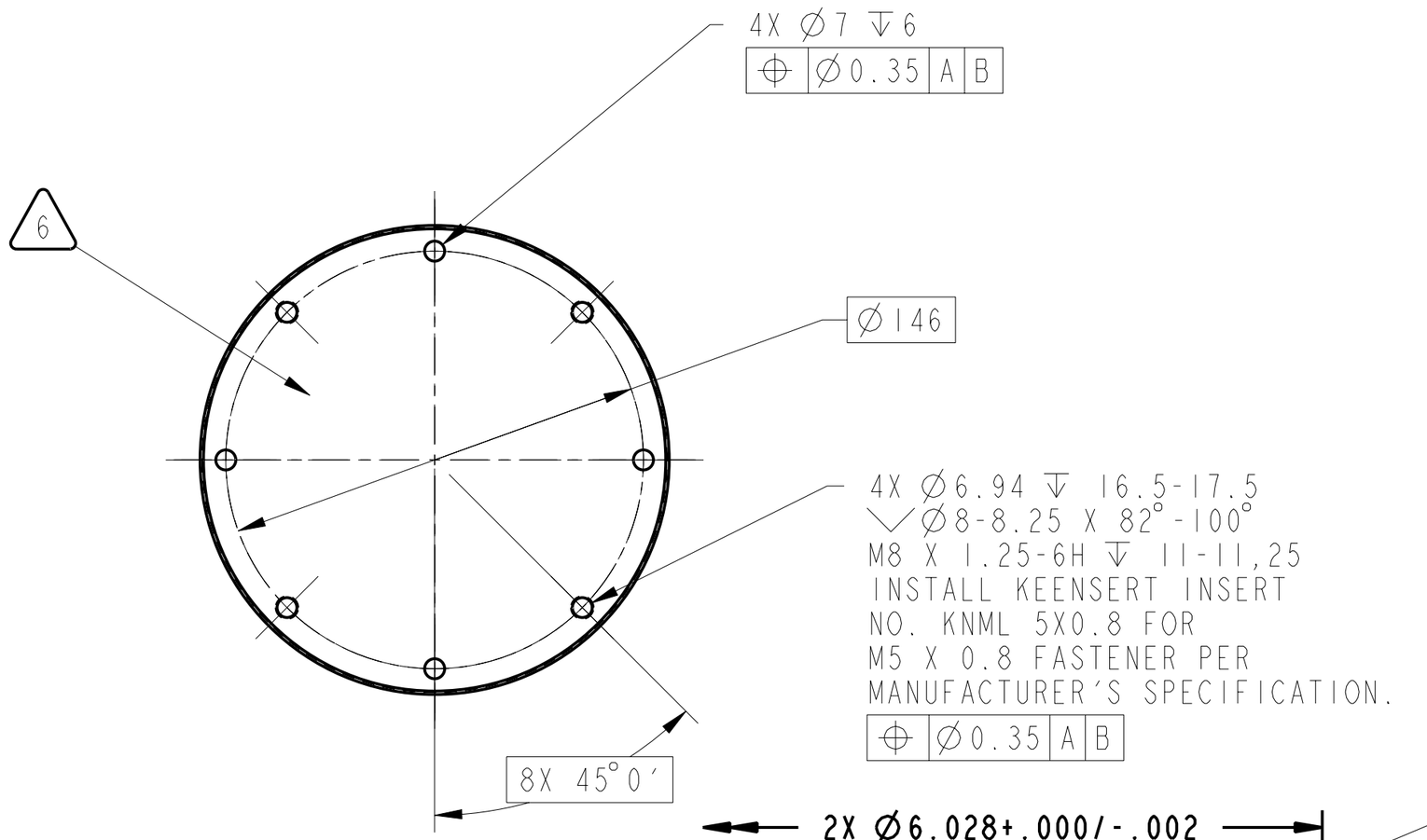

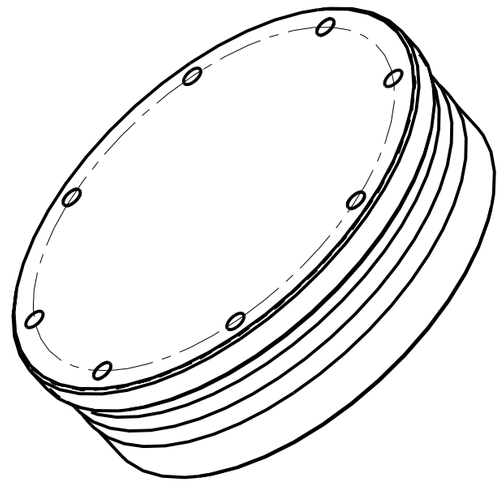

ISO VIEW

1. MATERIAL:
   6061-T6 ALUMINUM PLATE OR BAR PER FEDERAL SPEC QQ-A-250/11.
2. 3.2 Ra ALL MACHINED SURFACES UNLESS OTHERWISE NOTED PER ANSI/ASME B46.1
3. SURFACE TREAT ENTIRE PART BEFORE ANODIZING PER MIL-C-5541,CLASS 3. USE IRIDITE 14.2 OR REQUESTER APPROVED EQUAL PER MIL-C-81706, CLASS 3, FORM 11, METHOD B OR C AS APPLICABLE. SPOT TOUCH UP BY METHOD B.
4. CLEAR ANODIZE ALL SURFACES (EXCEPT TAPPED HOLES) PER MIL-A-8625, TYPE III, CLASS 2, .001-.002 INCH THICK PRIOR TO INSTALLING KEENSERTS. ALL DIMENSIONS APPLY AFTER ANODIZE.
5. DO NOT ANODIZE INDICATED SURFACES.
6. ELECTROCHEMICAL ETCH DRAWING PART NUMBER 67212MGDH003 ON SPECIFIED SURFACE PER SAE AS478, METHOD 7A (ZONE D5).
7. ESTIMATED WEIGHT: 0.610 Kg.

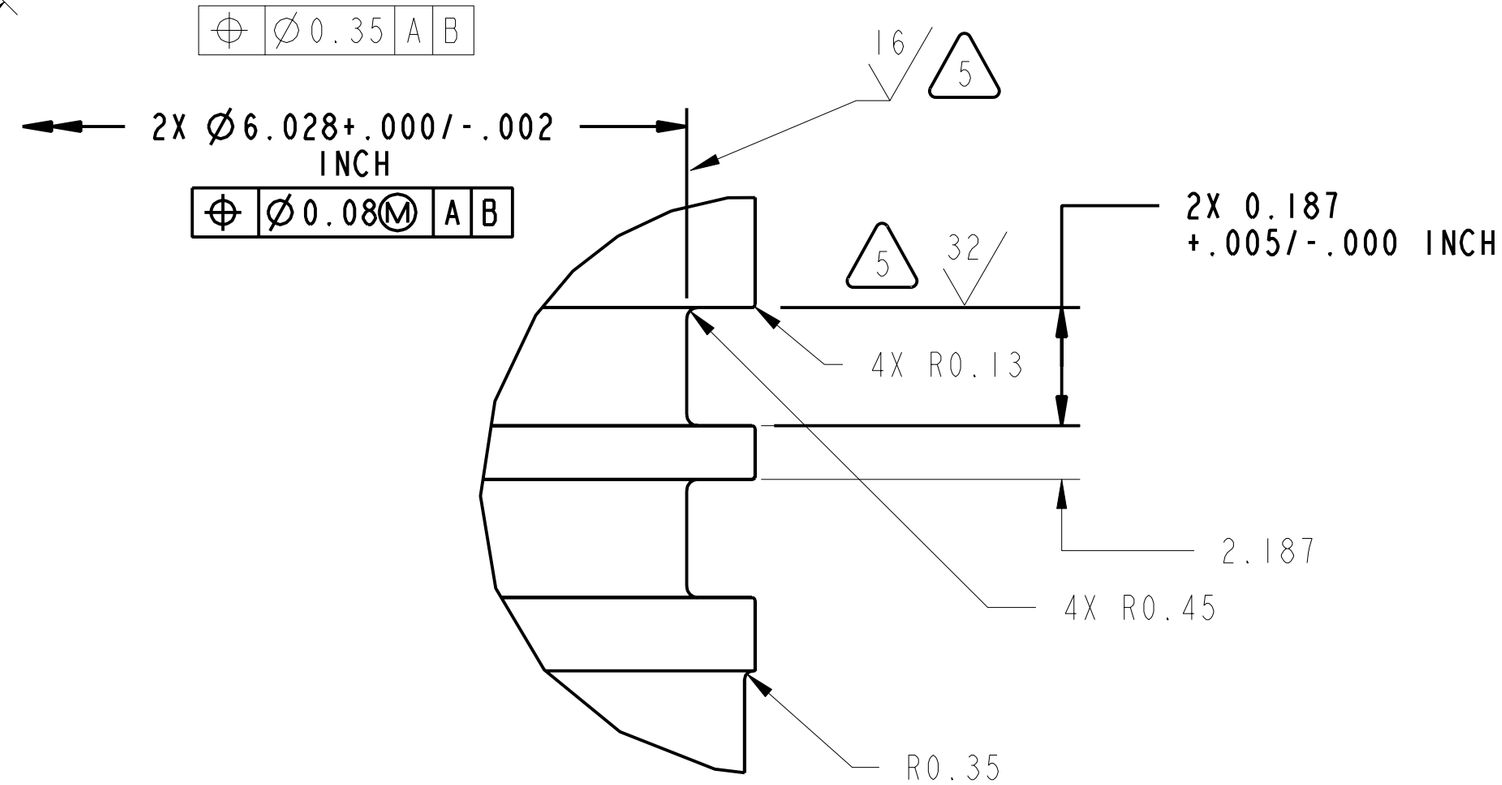

DETAIL A
SCALE 4:1

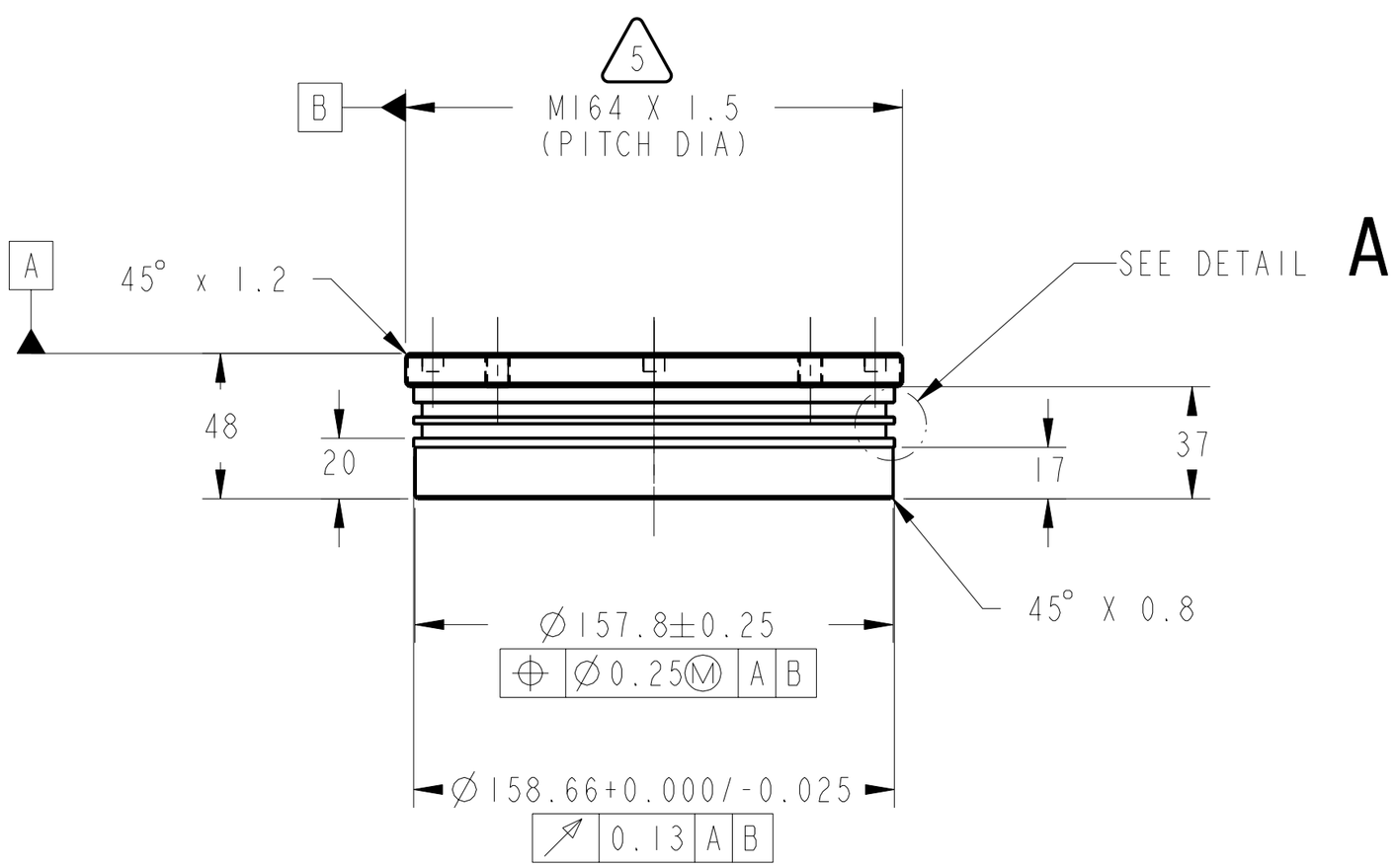

CHG	ZONE	DESCRIPTION	APP/DATE

REVISIONS

UNLESS OTHERWISE SPECIFIED:

1. ALL DIMENSIONING AND TOLERANCING PER ASME Y14.5M-1994
2. ALL DIMENSIONS ARE IN MILLIMETERS
3. BREAK EDGES: 0.2-0.5
4. LINEAR TOLERANCES:
   - 0.5-6 ±0.1
   - OVER 6-30 ±0.2
   - OVER 30- 120 ±0.3
   - OVER 120-315 ±0.5
   - OVER 315-1000 ±0.8
   - OVER 1000-2000 ±1.2
5. ANGULAR TOLERANCES: 0° 30'

CONTRACT	NAS3-27600
CONTRACTOR	ADF, INC.
TASK ORDER	60
DRAFTER	ADF/ J. IMBURGIA
ENGINEER	ANLX/ M. POLITI
DESIGNER	ADF/ J. IMBURGIA

THIRD ANGLE PROJECTION

NATIONAL AERONAUTICS AND SPACE ADMINISTRATION
JOHN H. GLENN RESEARCH CENTER
LEWIS FIELD
CLEVELAND, OHIO

67212MEDH200

WINDOW HYDRO PLUG

PDM REL LEVEL: PDM REVISION:

PDM DATABASE: FCF
MODEL NAME: WINDOW_HYDRO_PLUG

PRIOR TO USE VERIFY THE INTENDED PURPOSE IN PDM ("FOR" ATTRIBUTE)

SIZE	DRAWING NUMBER	REV	BLDG	AREA
A2	67212MGDH003	X	333	-
			UNITS: mm	
SCALE: 1:2	INITIAL REL DATE 08/XX/99	SHEET 1 OF 1	DISCIPLINE PRO-E	

PRO/E VERSION: 18.0

REV X
DRAWING NUMBER 67212MGDH003
SIZE A2

NAME:EDJEN OBJECT:67212MGDH003 DATE:30-Oct-00 13:30:39