DRAWING LIST

PART TYPE	BALLOON NO	DRAWING NUMBER	DESCRIPTION	QTY/ ASSY
	M328	67212MELM328	BOTTLE REAR SUPPORT ASSEMBLY	1
	M328	67212MEDM328	BOTTLE REAR SUPPORT	1

COMMERCIAL PARTS LIST

PART TYPE	BALLOON NO	DRAWING NUMBER	DESCRIPTION	QTY/ ASSY
C	2		SIMPLICITY METRIC SLEEVE BEARING, PACIFIC BEARING CO. PART NO. PSM-1014-10	2

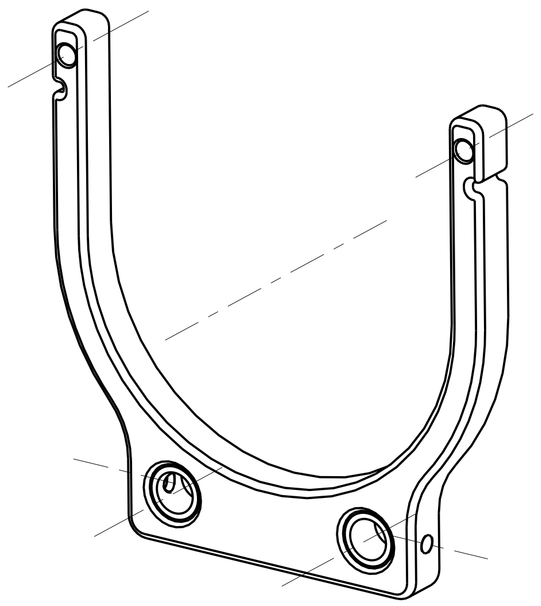

ISO VIEW

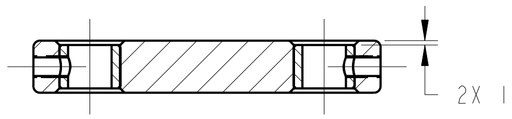

SECTION A-A

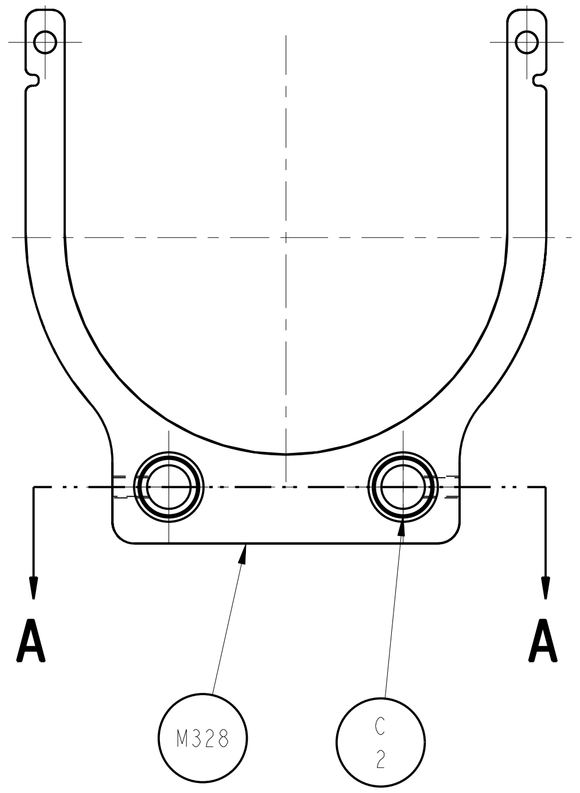

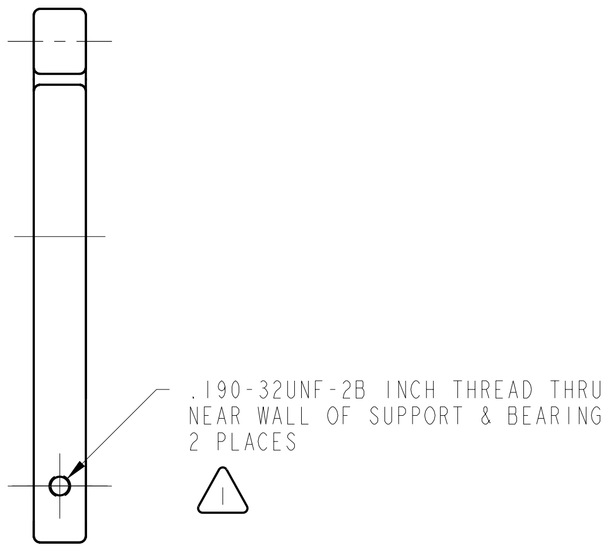

1. TAP DRILL THRU SUPPORT AND BEARING. LOCATE USING EXISTING SUPPORT PILOT HOLE (2 PLACES).
2. TOUCH UP MACHINED AREAS BY BRUSH PER MIL-C-5541 AND MIL-C-81706.
3. CLEAN SURFACES WITH 190 PROOF ETHYL ALCOHOL. WIPE WITH CLEAN COTTON SWABS AND/OR LINT-FREE CLOTH.
4. IDENTIFY BY TAGGING WITH DRAWING PART NUMBER 67212MELM328, PER SAE AS478, METHOD 35.
5. BEFORE STORAGE, PROTECT WITH CONTAMINATION BARRIER. USE CLEAN, NEW, TRANSPARENT, POLYETHYLENE BAG SEALED WITH FIBERGLASS PACKAGING TAPE. SEAL AND MARK WITH IDENTIFICATION NUMBER ON TAG ATTACHED TO BAG.
6. PROCESS PLAN REQUIRED.
7. ESTIMATED WEIGHT: 0.105 Kg.
8. QUANTITY: ONE ASSEMBLY REQUIRED.

UNLESS OTHERWISE SPECIFIED:
1. ALL DIMENSIONING AND TOLLERANCING PER ASME Y14.5M-1994
2. ALL DIMENSIONS ARE IN MILLIMETERS
3. BREAK EDGES: 0.2-0.5
4. LINEAR TOLERANCES:
   0.5-6 ±0.1
   OVER 6-30 ±0.2
   OVER 30- 120 ±0.3
   OVER 120-315 ±0.5
   OVER 315-1000 ±0.8
   OVER 1000-2000 ±1.2
5. ANGULAR TOLERANCES: 0° 30'

METRIC

THIRD ANGLE PROJECTION

DRAFTER	ADF/D.ROBINSON
DESIGNER	ADF/D.ROBINSON
ENGINEER	ANLX/D.CATALANO
MODEL NAME: 67212MELM328	
PRO/E VERSION: 19.0	
RELEASE DATE: 12/29/98	

CHG	ZONE	DESCRIPTION	APP/DATE

REVISIONS

NATIONAL AERONAUTICS AND SPACE ADMINISTRATION
LEWIS RESEARCH CENTER
CLEVELAND, OHIO

BOTTLE REAR SUPPORT ASSEMBLY

FUEL MANIFOLD ASSEMBLY
67212MELM300

SIZE	DRAWING NUMBER	REV	STAT	BLDG/CELL
A1	67212MELM328	-	R	333/-

SCALE: 1:1 SHEET 1 OF 1

DRAWING NUMBER 67212MELM328 REV - STAT R

NAME:EDJEN OBJECT:67212MELM328 DATE:30-Oct-00 13:30:14