DRAWING LIST

PART TYPE	BALLOON NO	DRAWING NUMBER	DESCRIPTION	QTY/ ASSY
	H246	67212MELH246	WINDOW ASSEMBLY	1
E	1	67212MEDH232	HOLDER	1
E	2	67212MEDH234	RETAINER NUT	1
E	3	67212MEDH235	SPEED BUMP RING	1
E	4	67212MEDH236	D HANDLE	2
E	5	67212MEDH237	D HANDLE ADAPTER	1
E	6	67212MEDH238	LATCH STUD	4
E	7	67212MEDH239	HINGE PIN	4
E	8	67212MEDH240	WINDOW GASKET	1
E	9	67212MEDH242	WAVE SPRING RETAINER	1
E	10	67212MEDH243	WINDOW	1
E	11	67212MEDH244	WINDOW SPACER	1
E	12	67212MEDH245	WINDOW GASKET	1

COMMERCIAL PARTS LIST

PART TYPE	BALLOON NO	DRAWING NUMBER	DESCRIPTION	QTY/ ASSY
C	13		RETAINING RING SMALLEY PART NO: WS-525, 128.1 I.D. X 6.35 RADIAL WALL X 1.83 THK.	1
C	14		RETAINING RING SMALLEY PART NO: WH-487, 128.8 O.D. X 6.35 RADIAL WALL X 1.83 THK.	1
C	15		O-RING, PARKER PART NO: 2-158, VITON.	1
C	16		O-RING, PARKER PART NO: 2-159, VITON.	2
C	17		WAVE SPRING, SMALLEY PART NO: TBD	1

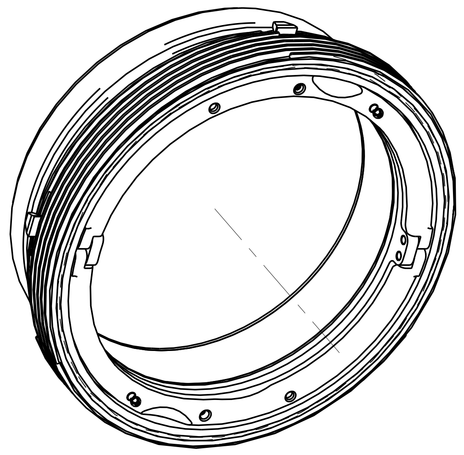

ISO VIEW

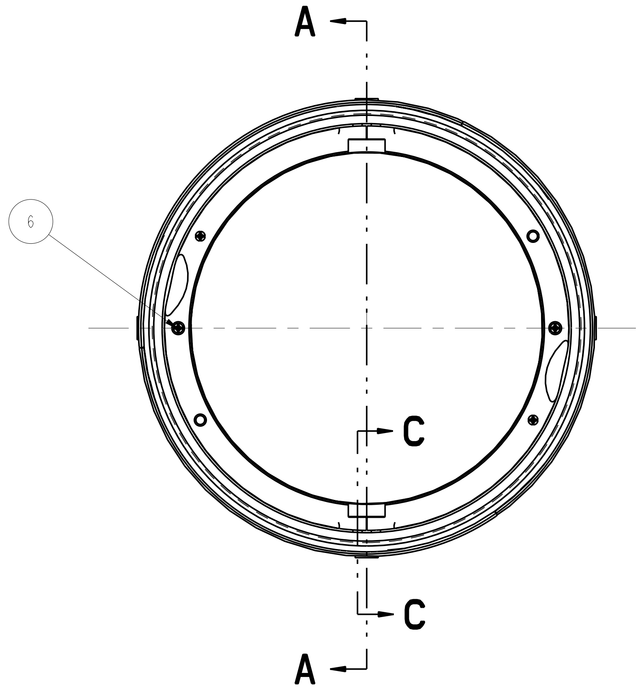

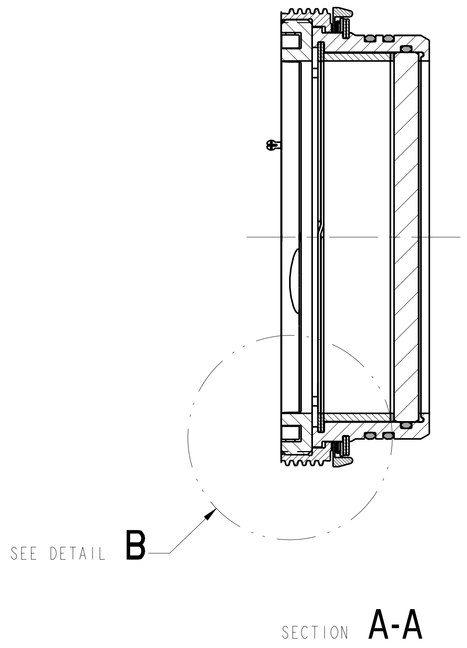

SECTION A-A

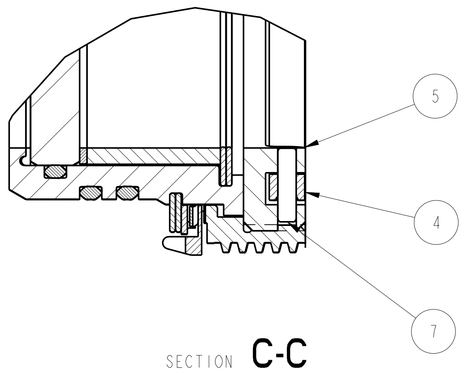

SECTION C-C
SCALE 2:1

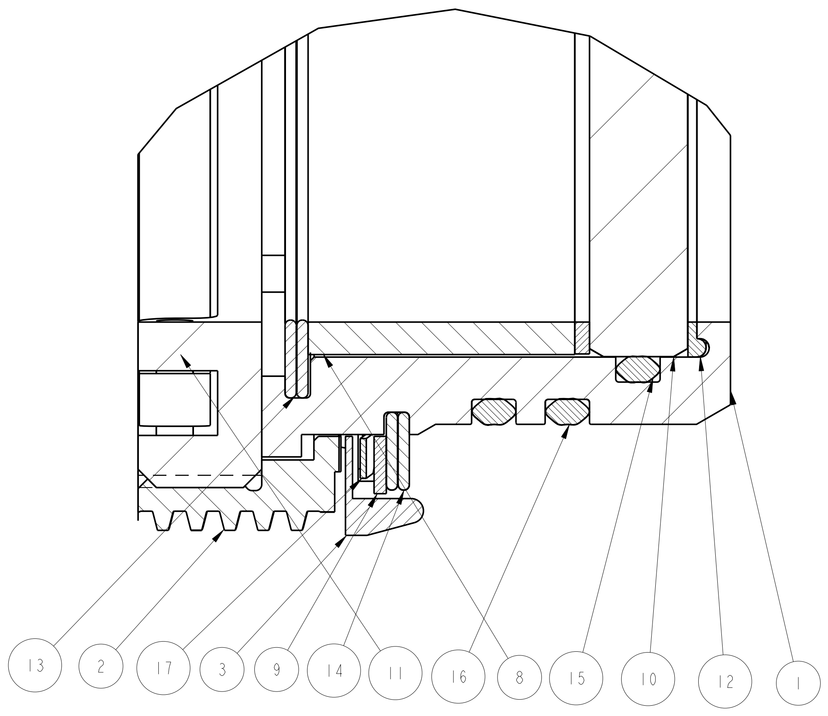

DETAIL B
SCALE 4:1

UNLESS OTHERWISE SPECIFIED:
1. ALL DIMENSIONING AND TOLERANCING PER ASME Y14.5M-1994
2. ALL DIMENSIONS ARE IN MILLIMETERS
3. BREAK EDGES: 0.2-0.5
4. LINEAR TOLERANCES:
   0.5-6 ±0.1
   OVER 6-30 ±0.2
   OVER 30-120 ±0.3
   OVER 120-315 ±0.5
   OVER 315-1000 ±0.8
   OVER 1000-2000 ±1.2
5. ANGULAR TOLERANCES: 0° 30'

CONTRACT	NAS3-27600
CONTRACTOR	ADF INC.
TASK ORDER	060
DRAFTER	ADF/N.MCMASTER
ENGINEER	AOS/M.POLITI
DESIGNER	ADF/N.MCMASTER

THIRD ANGLE PROJECTION

PDM REL LEVEL: BASELINE PDM REVISION: x.7
PDM DATABASE: fcf
MODEL NAME: 67212MELH246
PRIOR TO USE VERIFY THE INTENDED PURPOSE IN PDM ("FOR" ATTRIBUTE)

CHG	ZONE	DESCRIPTION	APP/DATE

REVISIONS

NATIONAL AERONAUTICS AND SPACE ADMINISTRATION
JOHN H. GLENN RESEARCH CENTER
LEWIS FIELD
CLEVELAND, OHIO

CHAMBER ASSEMBLY
67212MELH200

WINDOW ASSEMBLY

SIZE	DRAWING NUMBER	REV	BLDG	AREA
A0	67212MELH246	-	333	
			UNITS: mm	
SCALE: 1:1	INITIAL REL DATE XX/XX/XX	SHEET 1 OF 2	DISCIPLINE MECHANICAL	

PRO/E VERSION: 19.0

SIZE A0 DRAWING NUMBER 67212MELH246 REV -

NAME:FOBJER OBJECT:67212MELH246.7 DATE:30-Oct-00 13:28:54

CHG	ZONE	DESCRIPTION	APP/DATE

REVISIONS

NAME:EDJEN OBJECT:6721ZMEL4H246.2 DATE:30-OCT-00 13:28:55