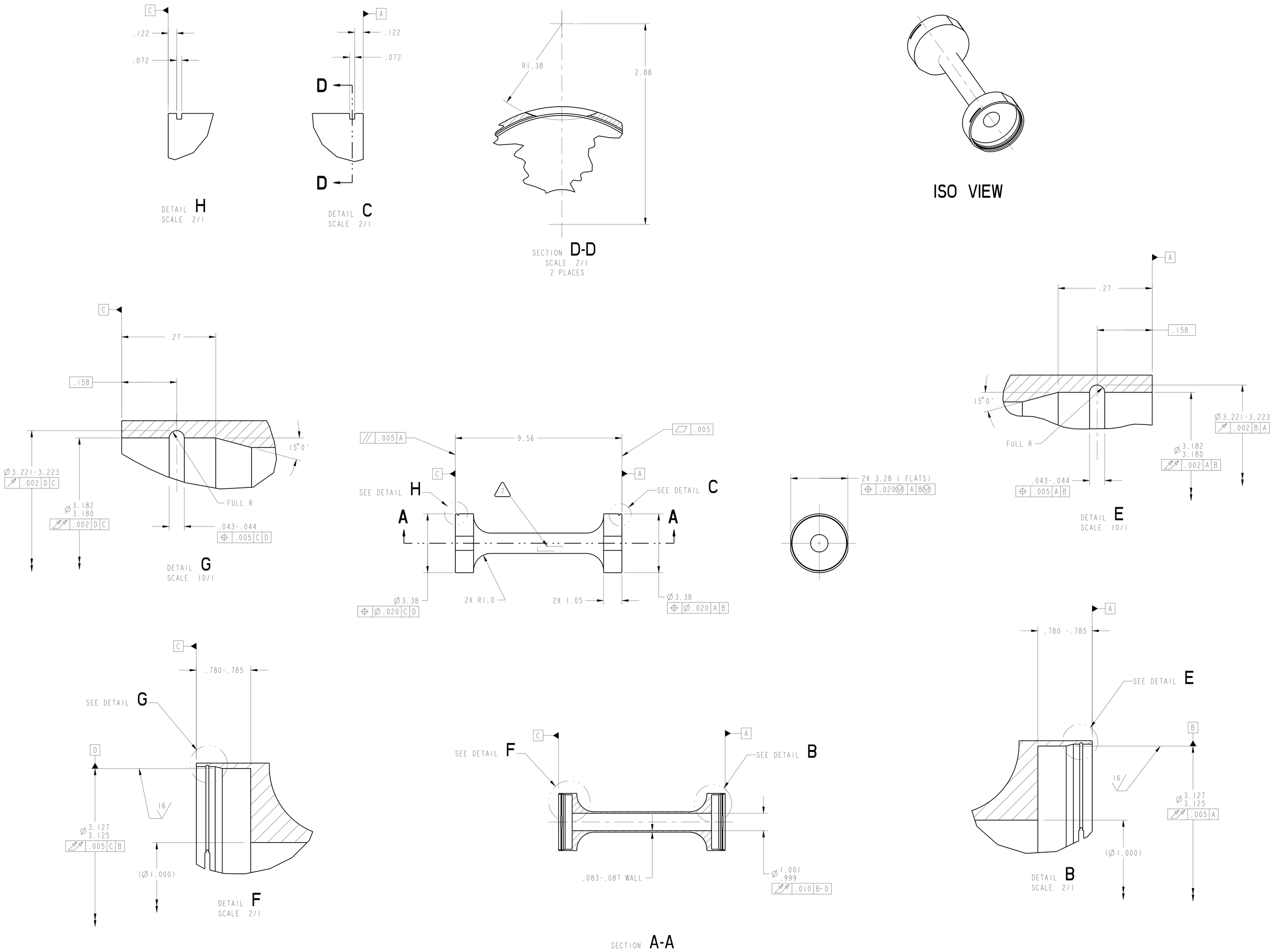


1. 0:MATERIAL: TYPE 316 STAINLESS STEEL PER QQ-S-766.
2. CERTIFICATION OF CHEMICAL AND MECHANICAL PROPERTIES IS REQUIRED.
3. ULTRASONIC INSPECT PER MIL-STD-2154, PRIOR TO FABRICATION. ACCEPTANCE PER SECTION 5.5.4., TABLE VI, CLASS LEVEL A.
4. 32 Ra ALL MACHINED SURFACES UNLESS OTHERWISE SPECIFIED PER ANSI/ASME B46.1.
5. ALL INTERNAL RADII TO BE R.02.
6. FINISHED PART MUST PASS DYE PENETRANT INSPECTION PER 16:ASTM E1417. ACCEPTANCE PER 17:MIL-STD-1907.
7. ELECTROCHEMICAL ETCH DRAWING PART NUMBER 67212MEDM976 ON SPECIFIED SURFACE, PER SAE AS478, METHOD 7A (ZONE E5).
8. CLEAN AND PASSIVATE PER MIL-S-5002, PARAGRAPHS 3.4.2.4 AND 3.4.2.4.1 AND FEDERAL SPECIFICATION QQ-P-35.
9. CLEAN SURFACES WITH 190 PROOF ETHYL ALCOHOL. WIPE WITH CLEAN COTTON SWABS AND/OR LINT-FREE CLOTH.
10. HANDLE WITH CLEAN, LINT-FREE GLOVES.
11. BEFORE STORAGE, PROTECT WITH CONTAMINATION BARRIER. USE CLEAN, NEW, TRANSPARENT, POLYETHYLENE BAG SEALED WITH FIBERGLASS PACKAGING TAPE. SEAL AND MARK WITH IDENTIFICATION NUMBER ON TAG ATTACHED TO BAG.
12. PROCESS PLAN REQUIRED.
13. ESTIMATED WEIGHT= 2.951 Lb. (1.341 Kg)

| CHG | ZONE | DESCRIPTION | APP/DATE |
|---|---|---|---|

REVISIONS

UNLESS OTHERWISE SPECIFIED DIMENSIONS ARE IN INCHES

| TOLERANCE ON | |
|---|---|
| .X | ± 0.03 |
| .XX | ± 0.03 |
| .XXX | ± 0.005 |
| FRACTION | ± - |
| ANGULAR | ± 0.50° |
| BREAK EDGES | .005-.010 |

DIMENSIONING AND TOLERANCING PER ASME Y14.5M-1994

| | |
|---|---|
| CONTRACT | NA53-27600 |
| CONTRACTOR | ADF INC. |
| TASK ORDER | 060 |
| APPROVED | - |
| DRAFTER | ADF/N.MCMASTER |
| ENGINEER | ANLX/L.DRALYUK |
| DESIGNER | ADF/J.VANTASSEL |
| MODEL NAME: 67212MEDM976 | |
| PRO/E VERSION: 19.0 | |
| RELEASE DATE | 06/18/99 |

NATIONAL AERONAUTICS AND SPACE ADMINISTRATION
LEWIS RESEARCH CENTER
CLEVELAND, OHIO

976 ONE INCH DIAMETER ADSORBER HOUSING

ADSORBER CARTRIDGE ASSEMBLY-
ONE INCH DIAMETER 67212MELM975

| SIZE | DRAWING NUMBER | REV | STAT | BLDG/CELL |
|---|---|---|---|---|
| E | 67212MEDM976 | - | R | 333/- |

SCALE: 1/2 AND NOTED — SHEET 1 OF 1

DRAWING NUMBER 67212MEDM976 REV - STAT R