COMMERCIAL PARTS LIST

PART TYPE	BALLOON NO	DESCRIPTION	QTY/ ASSY	
C	1	GLAND, SHORT TUBE BUTTWELD, "SWAGELOK" PART NUMBER6LV-4-VCR-3S-4TB3	1	9
C	2	FEMALE NUT, "SWAGELOK" PART NUMBER SS-4-VCR-1	1	9

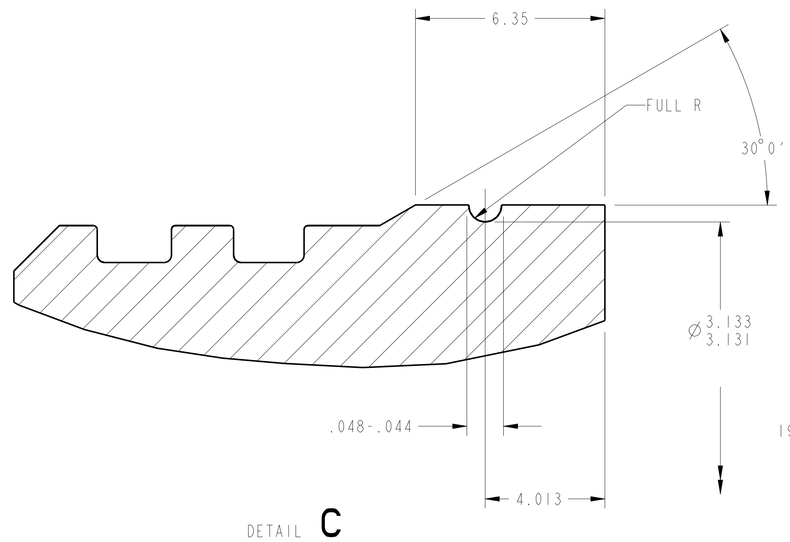

DETAIL C
SCALE 10/1

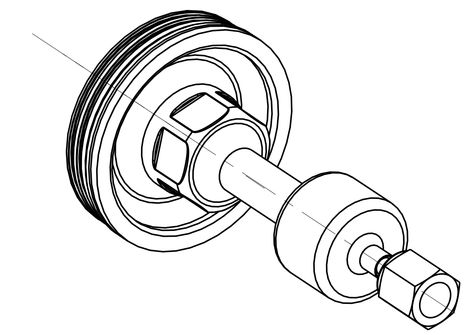

ISO VIEW

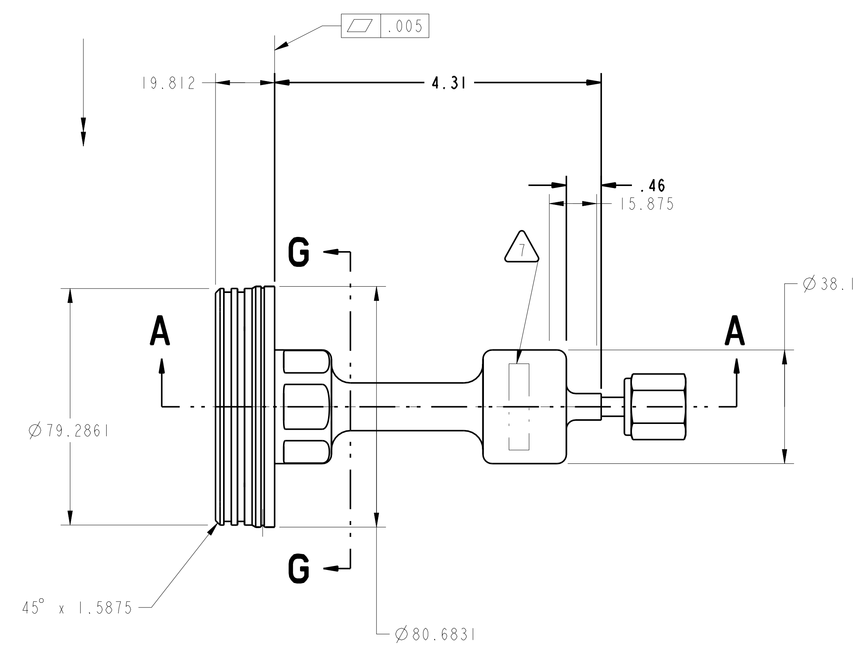

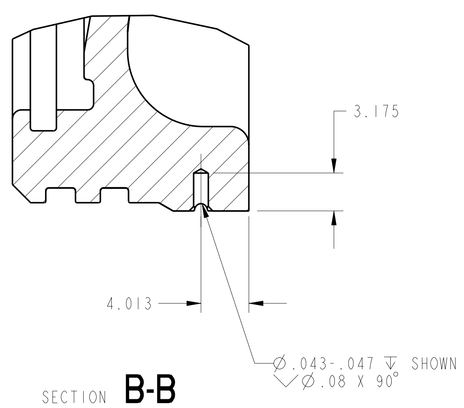

SECTION B-B
SCALE 4/1

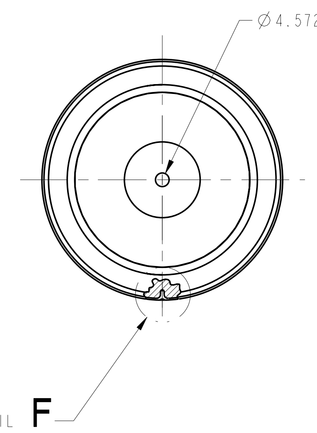

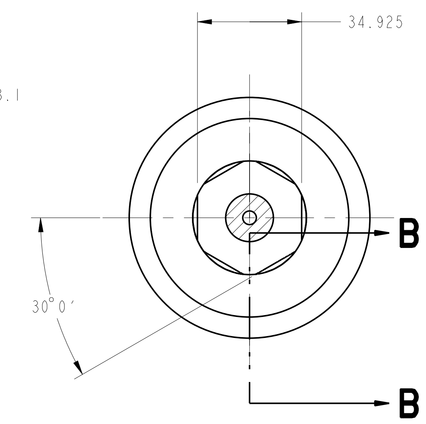

SECTION G-G

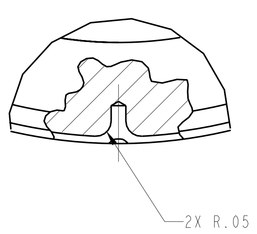

DETAIL F
SCALE 4/1

(Ø .250) MACHINE TO OBTAIN
.001-.003 DIAMETRAL CLEARANCE
WITH PART C1 ↧ .06

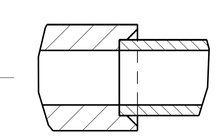

DETAIL E
SCALE 4/1

GTAW 6

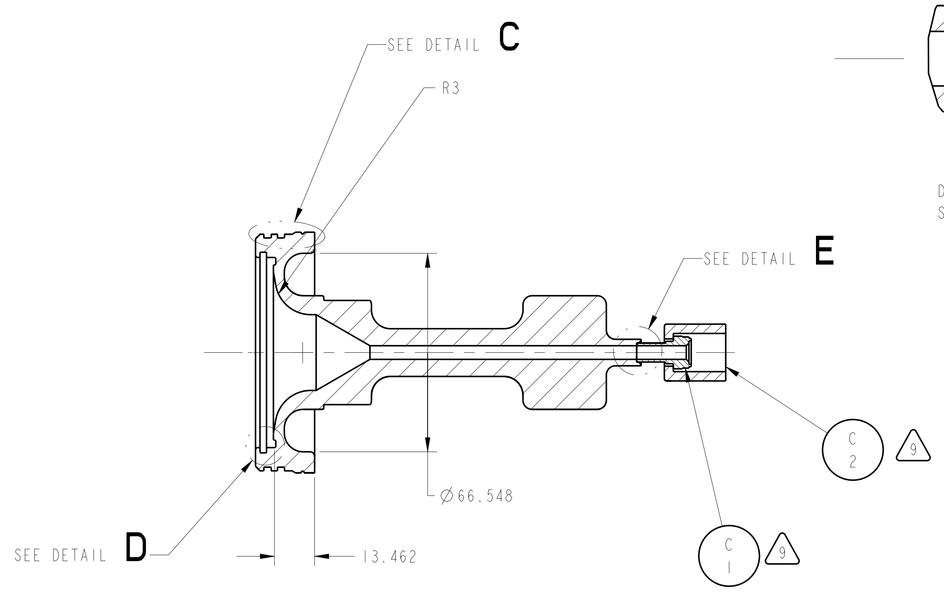

SECTION A-A

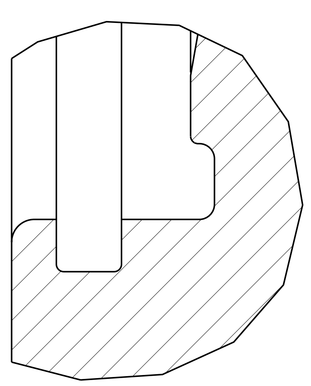

DETAIL D
SCALE 10/1

1. MATERIAL: TYPE 316 STAINLESS STEEL PER QQ-S-766.
2. CERTIFICATION OF CHEMICAL AND MECHANICAL PROPERTIES IS REQUIRED.
3. ULTRASONIC INSPECT PER MIL-STD-2154, PRIOR TO FABRICATION. ACCEPTANCE PER SECTION 5.5.4., TABLE VI, CLASS LEVEL A.
4. 32 Ra ALL MACHINED SURFACES UNLESS OTHERWISE SPECIFIED PER ANSI/ASME B46.1.
5. FINISHED PART MUST PASS DYE PENETRANT INSPECTION PER ASTM E1417. ACCEPTANCE PER MIL-STD-1907.
6. WELD PER MIL-STD-2219, CLASS A. INSPECT PER MIL-STD-2219, SECTION 5.4.
7. ELECTROCHEMICAL ETCH DRAWING PART NUMBER 67212MEDM974 ON SPECIFIED SURFACE, PER SAE AS478, METHOD 7A (ZONE E4).
8. CLEAN AND PASSIVATE PER MIL-S-5002, PARAGRAPHS 3.4.2.4 AND 3.4.2.4.1 AND FEDERAL SPECIFICATION QQ-P-35.
9. PROTECT EXISTING THREADS AND SEALING SURFACES FROM ANY DAMAGE.
10. CLEAN SURFACES WITH 190 PROOF ETHYL ALCOHOL. WIPE WITH CLEAN COTTON SWABS AND/OR LINT-FREE CLOTH.
11. HANDLE WITH CLEAN, LINT-FREE GLOVES.
12. BEFORE STORAGE, PROTECT WITH CONTAMINATION BARRIER. USE CLEAN, NEW, TRANSPARENT, POLYETHYLENE BAG SEALED WITH FIBERGLASS PACKAGING TAPE. SEAL AND MARK WITH IDENTIFICATION NUMBER ON TAG ATTACHED TO BAG.
13. PROCESS PLAN REQUIRED.
14. ESTIMATED WEIGHT= 1.864 Lb. (0.847 Kg.)

CHG	ZONE	DESCRIPTION	APP/DATE

REVISIONS

UNLESS OTHERWISE SPECIFIED DIMENSIONS ARE IN INCHES

TOLERANCE ON	
.X	± 0.03
.XX	± 0.01
.XXX	± 0.005
FRACTION	± -
ANGULAR	± 0.50°
BREAK EDGES	.005-.010

DIMENSIONING AND TOLERANCING PER ASME Y14.5M-1994

CONTRACT	NAS3-27600
CONTRACTOR	ADF INC.
TASK ORDER	060
APPROVED	-
DRAFTER	ADF/N.MCMASTER
ENGINEER	ANLX/I.DRALYUK
DESIGNER	ADF/J.VAN TASSEL
MODEL NAME:	67212MEDM974
PRO/E VERSION:	19.0
RELEASE DATE	06/18/99

NATIONAL AERONAUTICS AND SPACE ADMINISTRATION
LEWIS RESEARCH CENTER
CLEVELAND, OHIO

974 TWO INCH DIAMETER END CAP WELDMENT

TWO INCH DIAMETER END CAP ASSEMBLY

67212MELM972

SIZE	DRAWING NUMBER	REV	STAT	BLDG/CELL
E	67212MEDM974	-	R	333/-

SCALE: 1/1 AND NOTED

SHEET 1 OF 1

DRAWING NUMBER 67212MEDM974

REV STAT - R