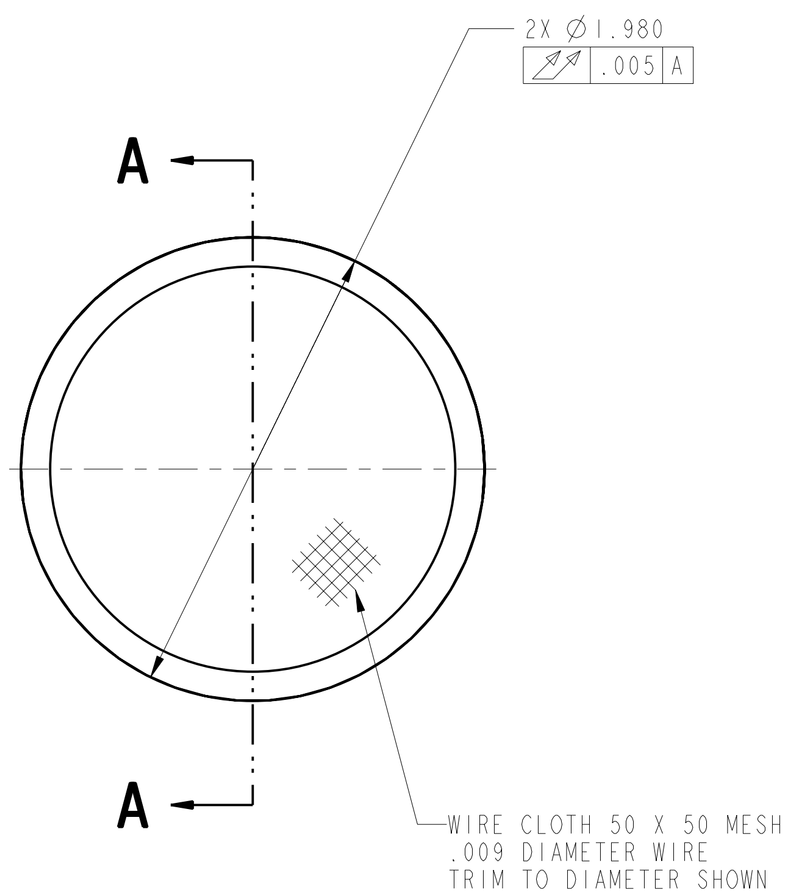

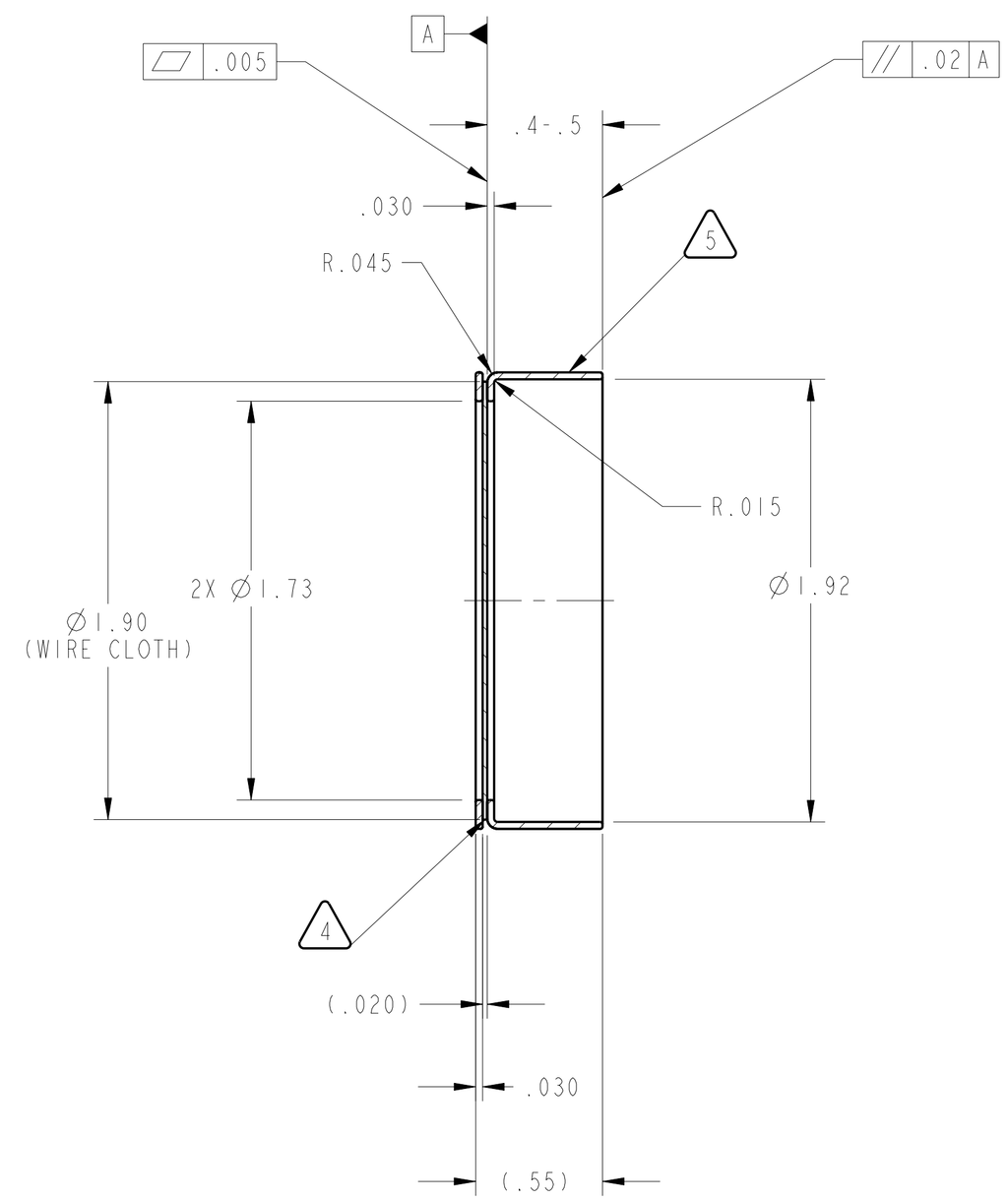

SECTION A-A

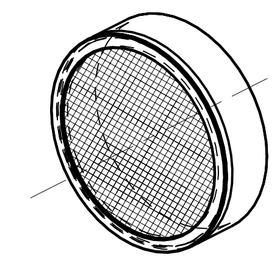

ISO VIEW

SCALE 1/1
(TANGENT LINES SHOWN)

1. MATERIAL:TYPE 316 STAINLESS STEEL, PER QQ-S-766.
2. CERTIFICATE OF CONFORMANCE REQUIRED FOR MATERIALS.
3. 32 Ra ALL MACHINED SURFACES PER ANSI/ASME B46.1.
4. VACUUM FURNACE BRAZE ASSEMBLY USING AWS A5.8, CLASS BAg-21 FILLER, COOL IN FURNACE, USING INERT ATMOSPHERE, AS PER AWS B2.2.
5. ELECTROCHEMICAL ETCH DRAWING PART NUMBER 67212MEDM973 ON SPECIFIED SURFACE, PER SAE AS478, METHOD 7A (ZONE D3).
6. CLEAN AND PASSIVATE PER MIL-S-5002, PARAGRAPHS 3.4.2.4 AND 3.4.2.4.1, AND QQ-P-35.
7. CLEAN SURFACES WITH 190 PROOF ETHYL ALCOHOL. WIPE WITH CLEAN LINT FREE CLOTH
8. HANDLE WITH CLEAN, LINT-FREE GLOVES.
9. BEFORE STORAGE, PROTECT WITH CONTAMINATION BARRIER. USE CLEAN, NEW, TRANSPARENT, POLYETHYLENE BAG SEALED WITH FIBERGLASS PACKAGING TAPE. SEAL AND MARK WITH IDENTIFICATION NUMBER ON TAG ATTACHED TO BAG.
10. PROCESS PLAN REQUIRED.
11. ESTIMATED WEIGHT: 0.048 Lb. (0.022 Kg.)

CHG	ZONE	DESCRIPTION	APP/DATE
A	C1 B6	CORRECTED NOTE 9 CLOTH WAS 100 X 100 MESH & .010 DIA WIRE	D.A.R. 06/22/99

REVISIONS

UNLESS OTHERWISE SPECIFIED DIMENSIONS ARE IN INCHES		CONTRACT	NAS3-27600
TOLERANCE ON		CONTRACTOR	ADF, INC.
.X	± 0.1	TASK ORDER	060
.XX	± 0.01	APPROVED	-
.XXX	± 0.005	DRAFTER	ADF/D.ROBINSON
FRACTION	± -	ENGINEER	ANLX/J.CZERNEC
ANGULAR	± 0.50°	DESIGNER	ADF/J.VAN TASSEL
BREAK EDGES	.005-.010	MODEL NAME:	67212MEDM973
DIMENSIONING AND TOLERANCING PER ASME Y14.5M-1994		PRO/E VERSION:	19.0
		RELEASE DATE	06/10/99

NATIONAL AERONAUTICS AND SPACE ADMINISTRATION
LEWIS RESEARCH CENTER
CLEVELAND, OHIO

973 TWO INCH DIAMETER SCREEN ASSEMBLY

TWO INCH DIAMETER ADSORBER CARTRIDGE ASSEMBLY 67212MELM970

SIZE	DRAWING NUMBER	REV	STAT	BLDG/CELL
D	67212MEDM973	A	R	333/-

SCALE: 2/1 AND NOTED SHEET 1 OF 1

DRAWING NUMBER 67212MEDM973 REV A STAT R