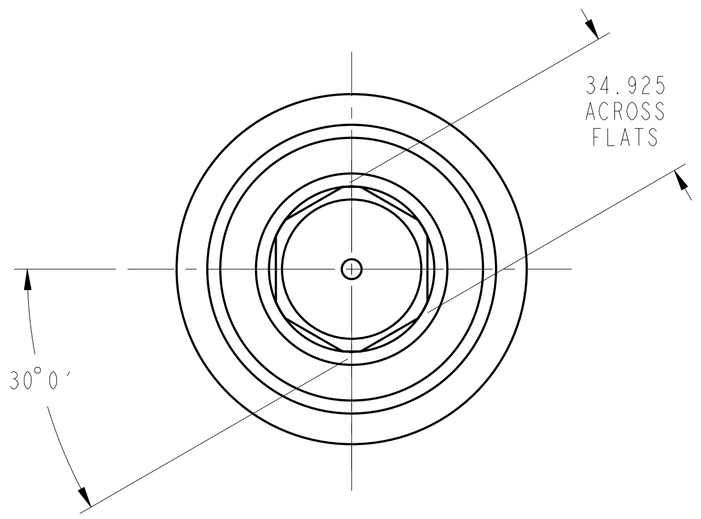

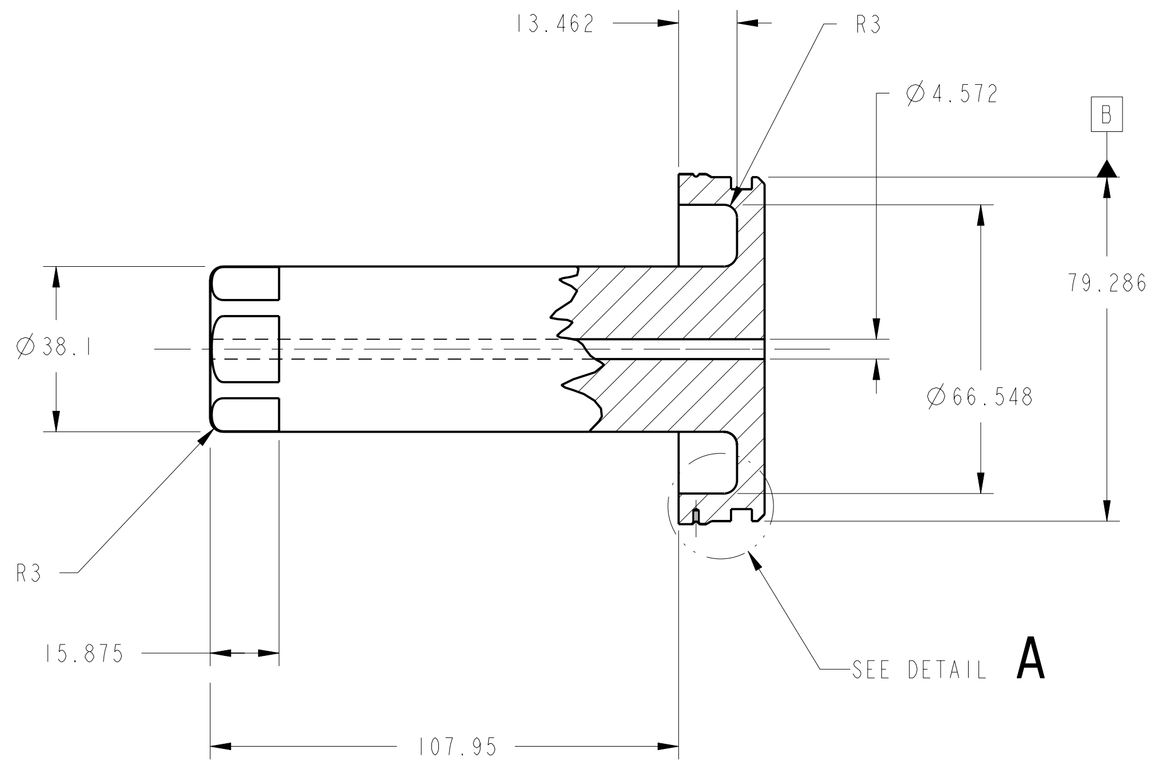

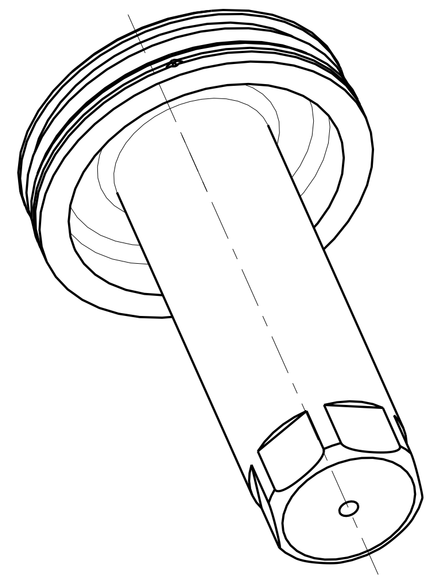

ISO VIEW

1. O:MATERIAL: TYPE 316 STAINLESS STEEL) PER QQ-S-766.
2. CERTIFICATION OF CHEMICAL AND MECHANICAL PROPERTIES IS REQUIRED.
3. ULTRASONIC INSPECT PER MIL-STD-2154, PRIOR TO FABRICATION. ACCEPTANCE PER SECTION 5.5.4., TABLE VI, CLASS LEVEL [insert value from Table VI].
4. 1.6 Ra ALL MACHINED SURFACES PER ANSI/ASME B46.1.
5. FINISHED PART MUST PASS DYE PENETRANT INSPECTION PER 16:ASTM E1417. ACCEPTANCE PER 17:MIL-STD-1907.)
6. ELECTROCHEMICAL ETCH DRAWING PART NUMBER & drawing_number ON SPECIFIED SURFACE, PER SAE AS478, METHOD 7A (ZONE ??).
7. CLEAN AND PASSIVATE PER MIL-S-5002, PARAGRAPHS 3.4.2.4 AND 3.4.2.4.1 AND FEDERAL SPECIFICATION QQ-P-35.
8. CLEAN SURFACES WITH 190 PROOF ETHYL ALCOHOL. WIPE WITH CLEAN COTTON SWABS AND/OR LINT-FREE CLOTH.
9. BEFORE STORAGE, PROTECT WITH CONTAMINATION BARRIER. USE CLEAN, NEW, TRANSPARENT, POLYETHYLENE BAG FOR SMALL ITEMS, OR 4 MIL THICK MINIMUM POLYETHYLENE SHEET SEALED WITH FIBERGLASS PACKAGING TAPE. SEAL AND MARK WITH IDENTIFICATION NUMBER ON TAG ATTACHED TO BAG.
10. PROCESS PLAN REQUIRED.
11. ESTIMATED WEIGHT:
12. QUANTITY: ONE REQUIRED.

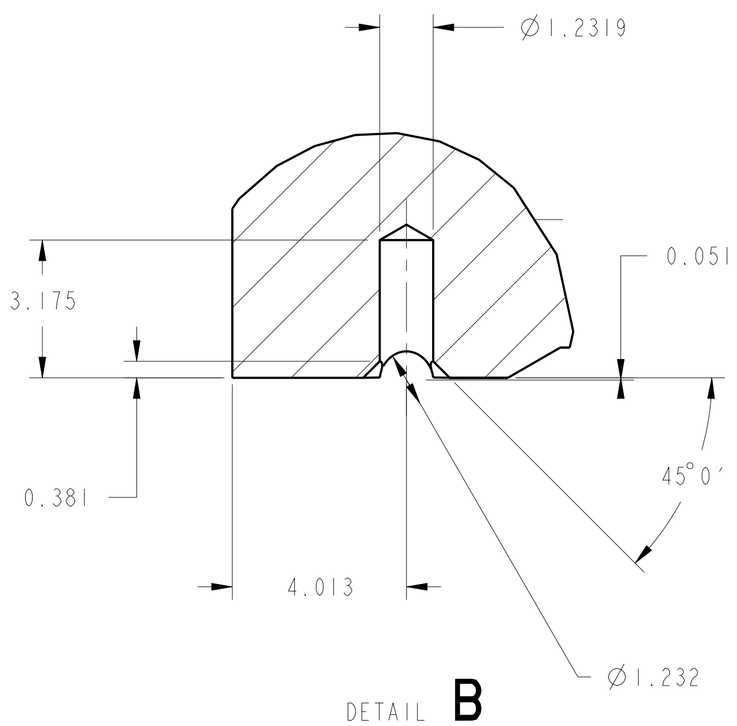

DETAIL B
SCALE 10:1

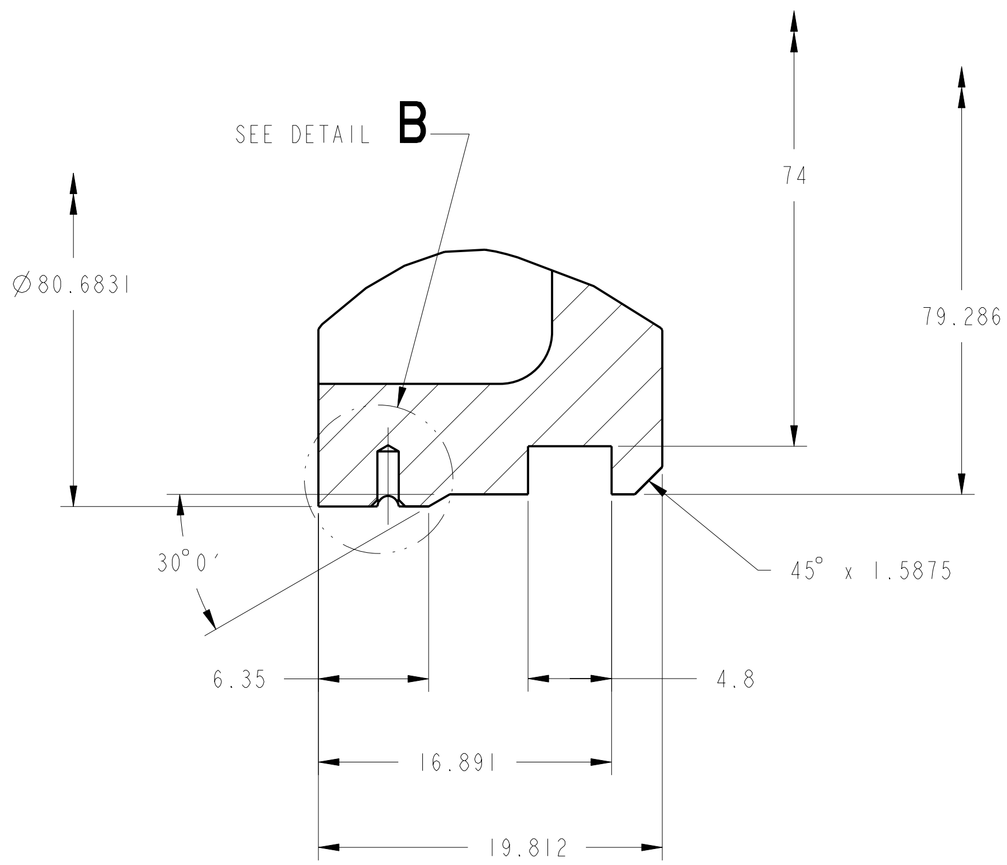

DETAIL A
SCALE 4:1

UNLESS OTHERWISE SPECIFIED:
1. ALL DIMENSIONING AND TOLLERANCING PER ASME Y14.5M-1994
2. ALL DIMENSIONS ARE IN MILLIMETERS
3. BREAK EDGES: 0.2-0.5
4. LINEAR TOLERANCES:
   0.5-6 ±0.1
   OVER 6-30 ±0.2
   OVER 30- 120 ±0.3
   OVER 120-315 ±0.5
   OVER 315-1000 ±0.8
   OVER 1000-2000 ±1.2
5. ANGULAR TOLERANCES: 0° 30′

METRIC

THIRD ANGLE PROJECTION

DRAFTER	J. Van Tassel
DESIGNER	J. Van Tassel
ENGINEER	I. Dralyuk
MODEL NAME: 67212MEDM974	
PRO/E VERSION: 18.0	
RELEASE DATE: XX/XX/XX	

CHG	ZONE	DESCRIPTION	APP/DATE

REVISIONS

NATIONAL AERONAUTICS AND SPACE ADMINISTRATION
LEWIS RESEARCH CENTER
CLEVELAND, OHIO

TWO INCH DIAMETER END CAP

FLUIDS AND COMBUSTION FACILITY

XXXXXXXXXXX

SIZE	DRAWING NUMBER	REV	STAT	BLDG/CELL
A1	67212MEDM972	-	-	333/XXX
SCALE: 1:1		SHEET 1 OF 1		

CHECKPRINT

DRAWING NUMBER 67212MEDM972

STAT -

REV -

NAME:EDJEN OBJECT:67212MEDM972 DATE:30-Oct-00 13:25:39