1. MATERIAL: TYPE 316 STAINLESS STEEL PER QQ-S-766.
2. CERTIFICATION OF CHEMICAL AND MECHANICAL PROPERTIES IS REQUIRED.
3. ULTRASONIC INSPECT PER MIL-STD-2154, PRIOR TO FABRICATION. ACCEPTANCE PER SECTION 5.5.4., TABLE VI, CLASS LEVEL A.
4. 32 Ra ALL MACHINED SURFACES UNLESS OTHERWISE SPECIFIED PER ANSI/ASME B46.1.
5. ALL INTERNAL RADII TO BE R.02.
6. FINISHED PART MUST PASS DYE PENETRANT INSPECTION PER ASTM E1417. ACCEPTANCE PER MIL-STD-1907.
7. ELECTROCHEMICAL ETCH DRAWING PART NUMBER 67212MEDM971 ON SPECIFIED SURFACE, PER SAE AS478, METHOD 7A (ZONE E5).
8. CLEAN AND PASSIVATE PER MIL-S-5002, PARAGRAPHS 3.4.2.4 AND 3.4.2.4.1 AND FEDERAL SPECIFICATION QQ-P-35.
9. CLEAN SURFACES WITH 190 PROOF ETHYL ALCOHOL. WIPE WITH CLEAN COTTON SWABS AND/OR LINT-FREE CLOTH.
10. HANDLE WITH CLEAN, LINT-FREE GLOVES.
11. BEFORE STORAGE, PROTECT WITH CONTAMINATION BARRIER. USE CLEAN, NEW, TRANSPARENT, POLYETHYLENE BAG SEALED WITH FIBERGLASS PACKAGING TAPE. SEAL AND MARK WITH IDENTIFICATION NUMBER ON TAG ATTACHED TO BAG.
12. PROCESS PLAN REQUIRED.
13. ESTIMATED WEIGHT= 3.218 Lb.(1.463 Kg)

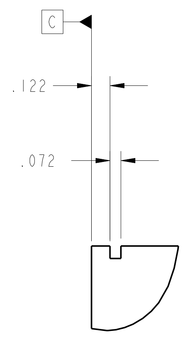

DETAIL H
SCALE 2/1

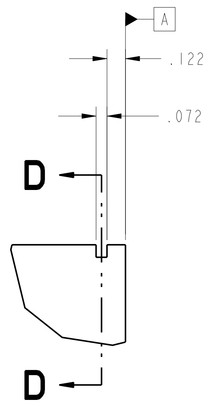

DETAIL C
SCALE 2/1

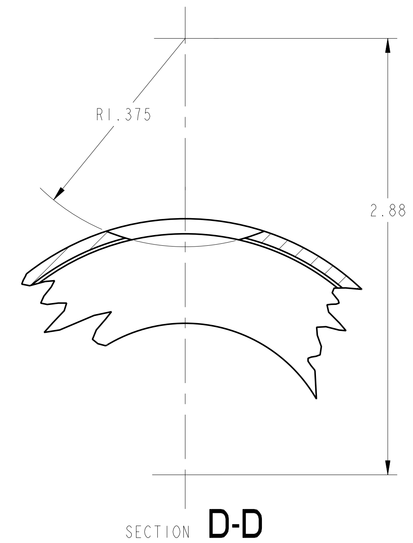

SECTION D-D
SCALE 2/1
2 PLACES

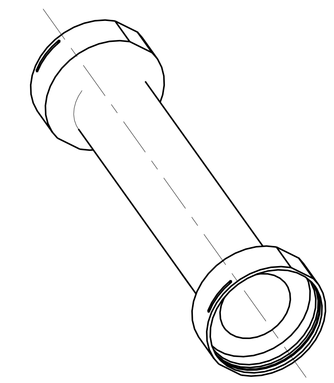

ISO VIEW

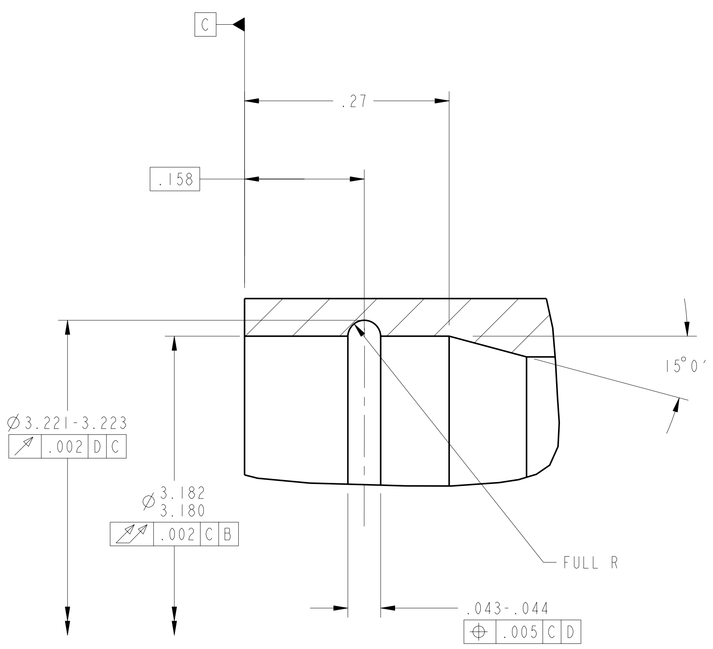

DETAIL G
SCALE 10/1

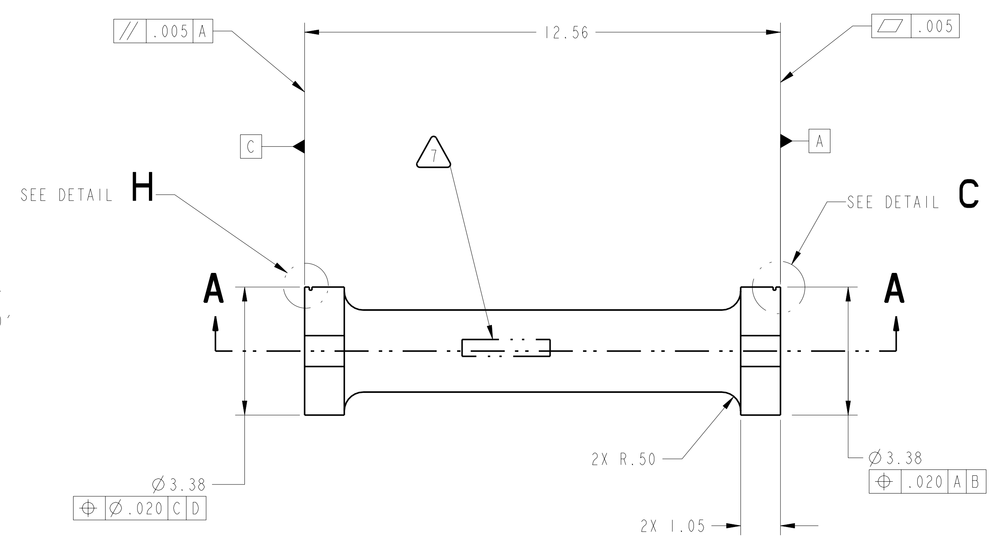

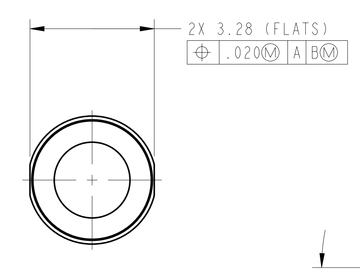

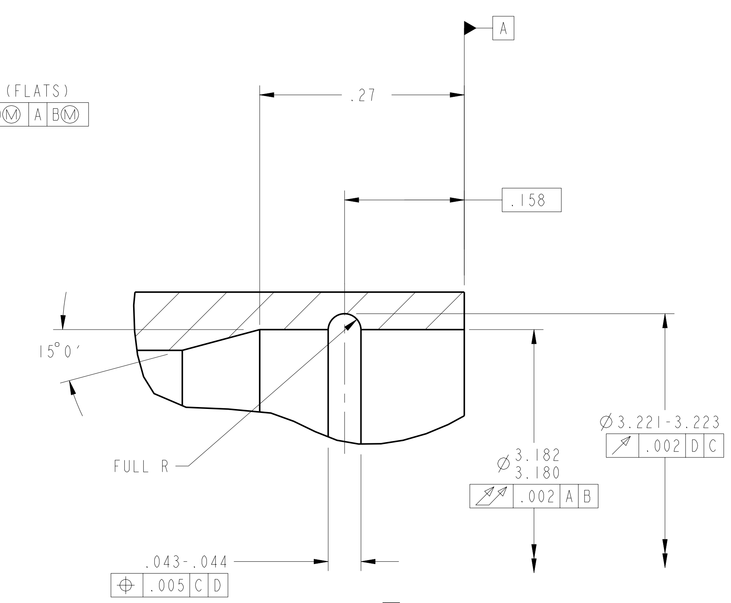

DETAIL E
SCALE 10/1

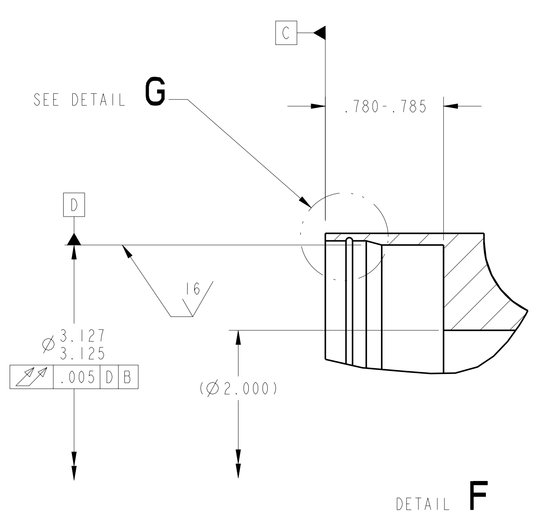

DETAIL F
SCALE 2/1

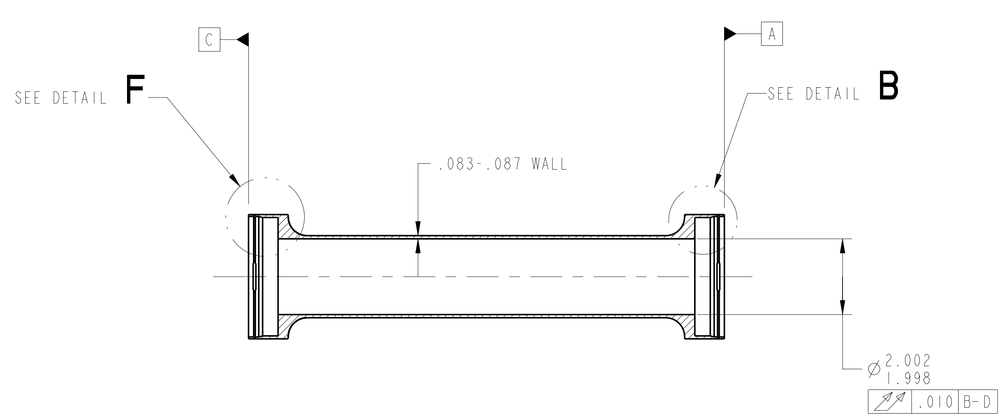

SECTION A-A

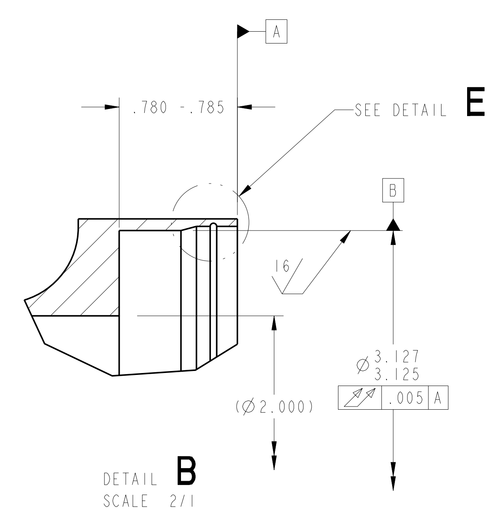

DETAIL B
SCALE 2/1

CHG	ZONE	DESCRIPTION	APP/DATE

REVISIONS

UNLESS OTHERWISE SPECIFIED DIMENSIONS ARE IN INCHES		CONTRACT	NAS3-27600
TOLERANCE ON		CONTRACTOR	ADF, INC.
.X	± 0.0	TASK ORDER	060
.XX	± 0.01	APPROVED	-
.XXX	± 0.005	DRAFTER	ADF/N.McMASTER
FRACTION	± -	ENGINEER	ANLX/I.DRALYUK
ANGULAR	± 0.50°	DESIGNER	ADF/J.VAN TASSEL
BREAK EDGES	.005-.010	MODEL NAME:	67212MEDM971
DIMENSIONING AND TOLERANCING PER ASME Y14.5M-1994		PRO/E VERSION:	19.0
		RELEASE DATE	06/18/99

NATIONAL AERONAUTICS AND SPACE ADMINISTRATION
LEWIS RESEARCH CENTER
CLEVELAND, OHIO

971 TWO INCH DIAMETER ADSORBER HOUSING

ADSORBER CARTRIDGE ASSEMBLY-
TWO INCH DIAMETER 67212MELM970

SIZE	DRAWING NUMBER	REV	STAT	BLDG/CELL
E	67212MEDM971	-	R	333/-

SCALE: 1/2 AND NOTED — SHEET 1 OF 1

DRAWING NUMBER 67212MEDM971 — REV - — STAT R