COMMERCIAL PARTS LIST

PART TYPE	BALLOON NO	DRAWING NUMBER	DESCRIPTION	QTY/ ASSY
C	1	XXXXXXXXXXXX	INSERT, MINIATURE, METRIC, INTERNAL THREAD LOCKING, KEYED, TYPE 303 STAINLESS STEEL, KEENSERT PART NO. KNCML 4X0.7 (FOR M4 X 0.7 FASTENER)	1

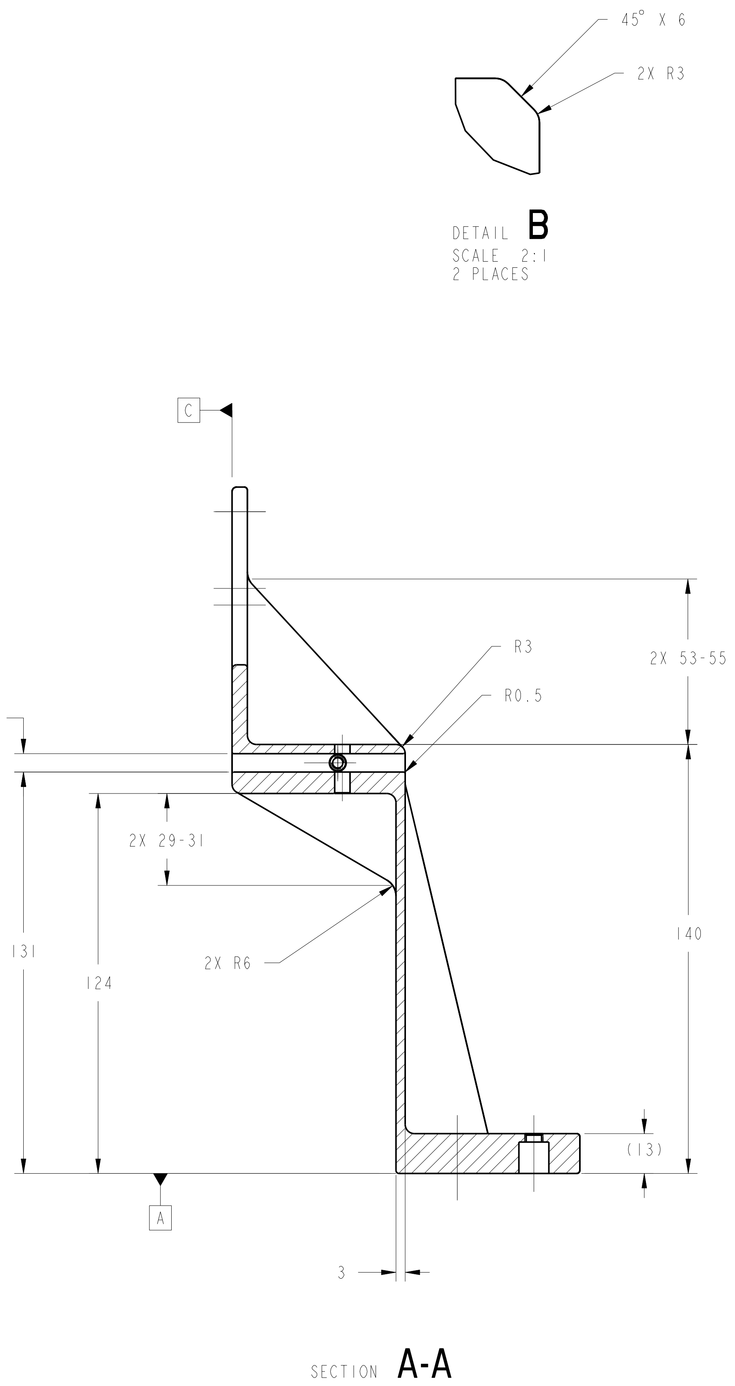

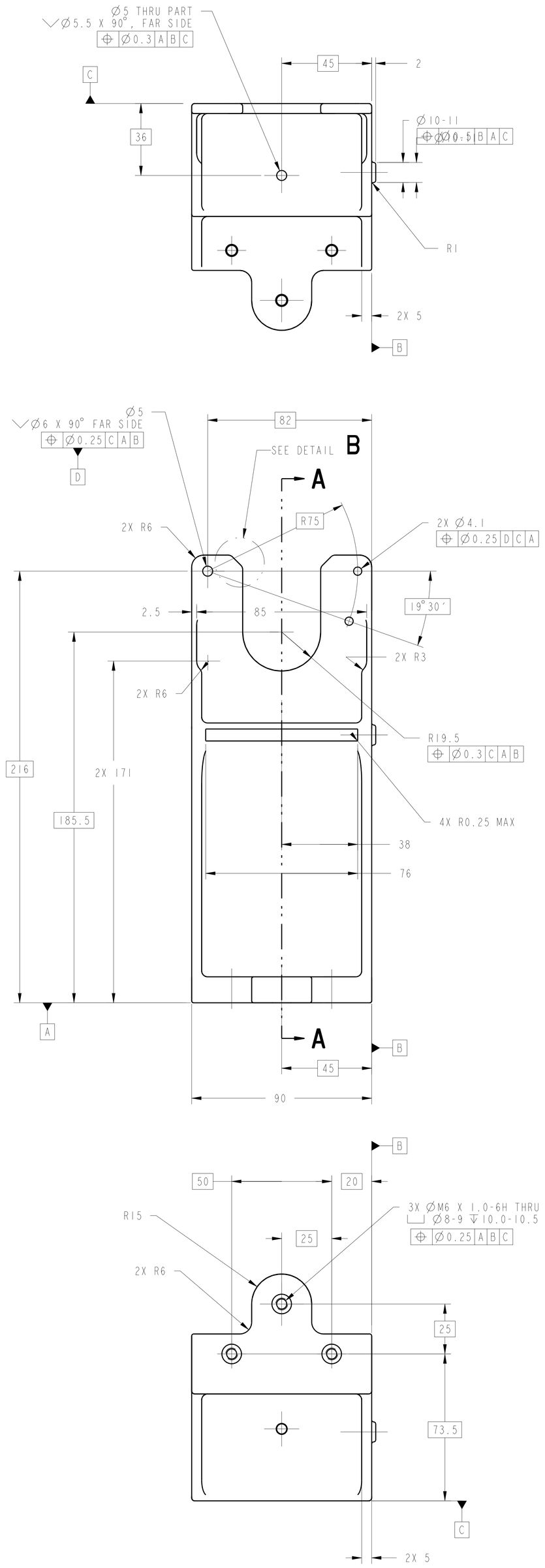

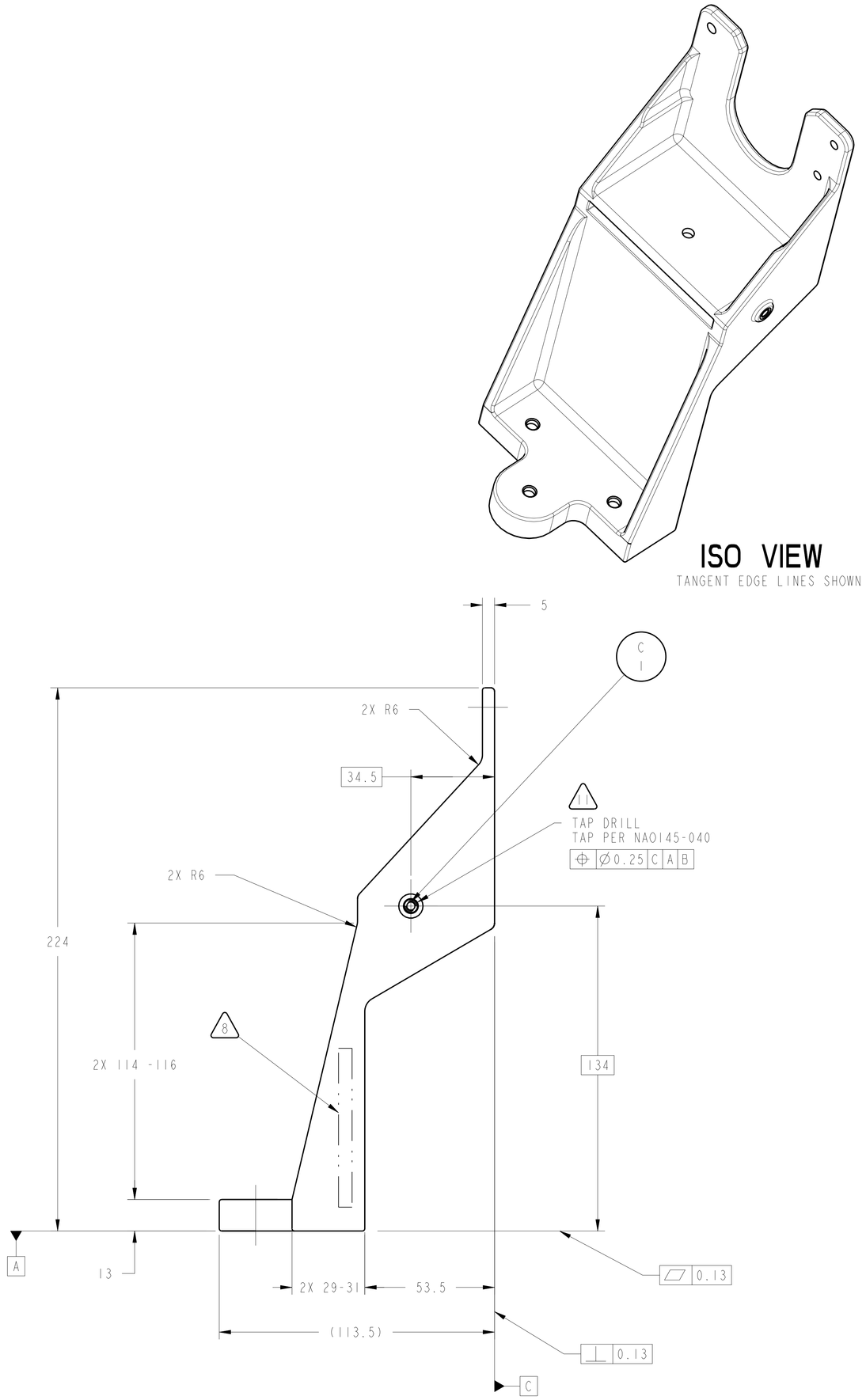

1. MATERIAL: 6061-T651 ALUMINUM PER FEDERAL SPEC QQ-A-250/11.
2. CERTIFICATION OF CHEMICAL AND MECHANICAL PROPERTIES REQUIRED.
3. ULTRASONIC INSPECT PER MIL-STD-2154, PRIOR TO FABRICATION. ACCEPTANCE PER SECTION 5.5.4., TABLE VI, CLASS LEVEL A.
4. 1.6 Ra ALL MACHINED SURFACES.
5. ALL EXTERNAL CORNER RADII TO BE R1-1.5 UNLESS OTHERWISE SPECIFIED.
6. ALL INTERNAL FILLET RADII TO BE R3 UNLESS OTHERWISE SPECIFIED.
7. ROUGH MACHINED AND FINISHED PART MUST PASS DYE PENETRANT INSPECTION PER ASTM E1417. ACCEPTANCE PER MIL-STD-1907.
8. ELECTROCHEMICAL ETCH DRAWING PART NUMBER 67212MEDM966 ON SPECIFIED SURFACE PER SAE AS478, METHOD 7A (ZONE B5).
9. SURFACE TREAT ENTIRE PART PER MIL-C-5541 USE IRIDITE 14.2 OR APPROVED EQUIVALENT PER MIL-C-81706, CLASS 3, FORM II, METHOD B OR C, AS APPLICABLE, PRIOR TO INSTALLING THREADED INSERT. SPOT TOUCH UP BY METHOD B.
10. HARD FLAT BLACK ANODIZE PER MIL-A-8625, TYPE III, CLASS 2, PRIOR TO INSTALLING THREADED INSERT. ALL DIMENSIONS APPLY AFTER ANODIZING.
11. INSTALL KEENSERT INSERT PER MANUFACTURER'S SPECIFICATIONS AFTER SURFACE TREATMENT PER NOTES 9 AND 10.
12. CLEAN SURFACES WITH 190 PROOF ETHYL ALCOHOL. WIPE WITH CLEAN LINT FREE CLOTH
13. HANDLE WITH CLEAN, LINT-FREE GLOVES.
14. BEFORE STORAGE, PROTECT WITH CONTAMINATION BARRIER. USE CLEAN, NEW, TRANSPARENT, POLYETHYLENE BAG SEALED WITH FIBERGLASS PACKAGING TAPE. SEAL AND MARK WITH IDENTIFICATION NUMBER ON TAG ATTACHED TO BAG.
15. PROCESS PLAN REQUIRED.
16. ESTIMATED WEIGHT= 0.518 Kg.

UNLESS OTHERWISE SPECIFIED:
1. ALL DIMENSIONING AND TOLLERANCING PER ASME Y14.5M-1994
2. ALL DIMENSIONS ARE IN MILLIMETERS
3. BREAK EDGES: 0.2-0.5
4. LINEAR TOLERANCES:
   0.5-6 ±0.1
   OVER 6-30 ±0.2
   OVER 30-120 ±0.3
   OVER 120-315 ±0.5
   OVER 315-1000 ±0.8
   OVER 1000-2000 ±1.2
5. ANGULAR TOLERANCES: 0° 30'

METRIC

THIRD ANGLE PROJECTION

DRAFTER	ADF/W. HOLT
DESIGNER	ADF/J. VAN TASSEL
ENGINEER	ANLX/J.CZERNEC
MODEL NAME:	67212MEDM966
PRO/E VERSION:	19.0
RELEASE DATE:	06/18/99

CHG	ZONE	DESCRIPTION	APP/DATE

REVISIONS

NATIONAL AERONAUTICS AND SPACE ADMINISTRATION
LEWIS RESEARCH CENTER
CLEVELAND, OHIO

966 ADSORBER CARTRIDGE BRACKET, FLOATING CONNECTION

ADSORBER CARTRIDGE BRACKET ASSEMBLY, FLOATING CONNECTION

SIZE	DRAWING NUMBER	REV	STAT	BLDG/CELL
A0	67212MEDM966	-	R	333/ -

SCALE: 1:1 AND NOTED

SHEET 1 OF 1

DRAWING NUMBER 67212MEDM966

REV - STAT R

NAME:ED.EA MODEL:67212MEDM966 DATE:30-Oct-00 13:24:13