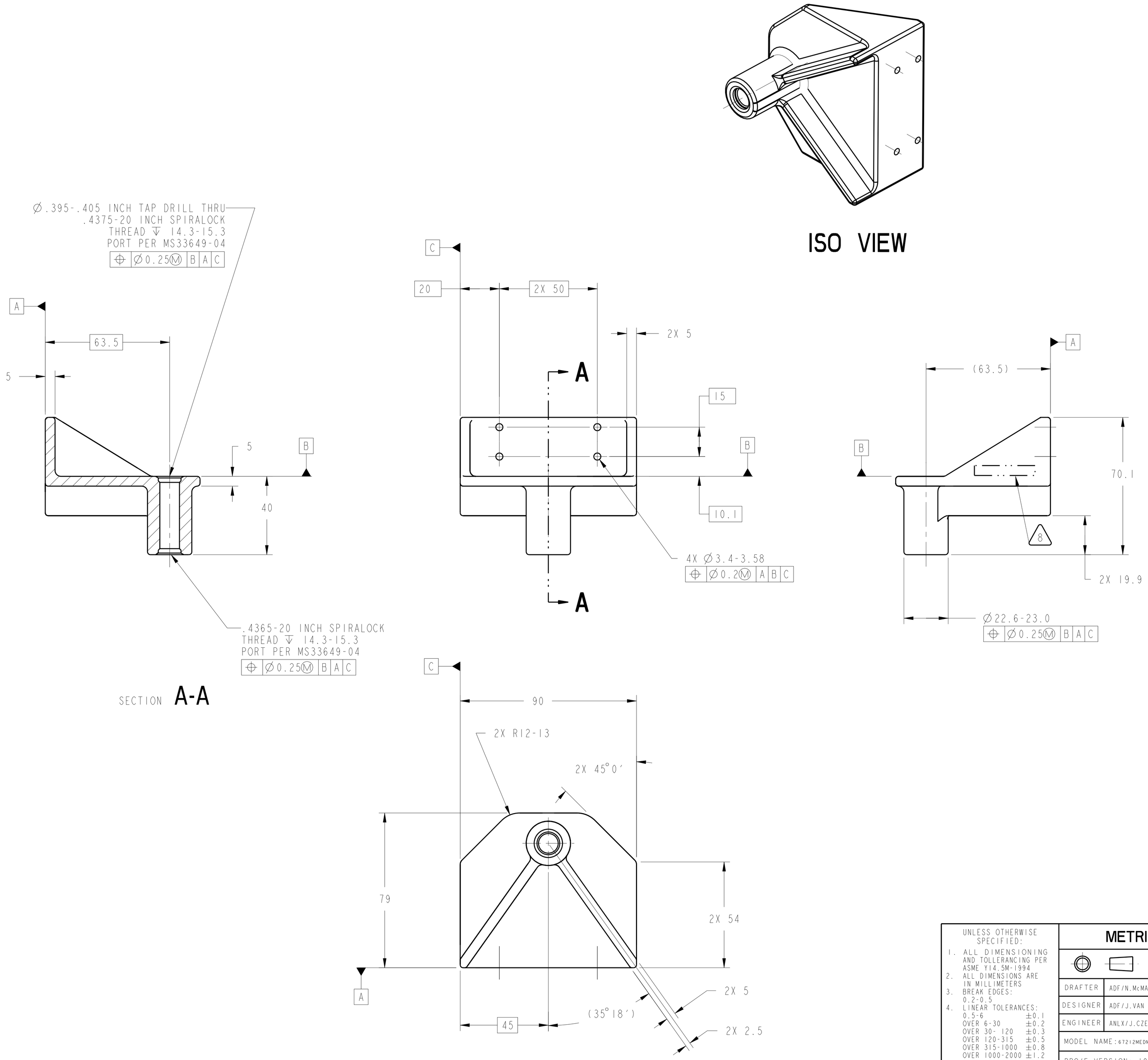

1. MATERIAL: 6061-T651 ALUMINUM PER FEDERAL SPEC QQ-A-250/11.
2. CERTIFICATION OF CHEMICAL AND MECHANICAL PROPERTIES IS REQUIRED.
3. ULTRASONIC INSPECT PER MIL-STD-2154, PRIOR TO FABRICATION. ACCEPTANCE PER SECTION 5.5.4., TABLE VI, CLASS LEVEL A.
4. 1.6 Ra ALL MACHINED SURFACES PER ANSI/ASME B46.1.
5. ALL EXTERNAL CORNER RADII TO BE R1.5 UNLESS OTHERWISE SPECIFIED.
6. ALL INTERNAL FILLET RADII TO BE R3.
7. FINISHED PART MUST PASS DYE PENETRANT INSPECTION PER ASTM E1417. ACCEPTANCE PER 17:MIL-STD-1907.
8. ELECTROCHEMICAL ETCH DRAWING PART NUMBER 67212MEDM962 ON SPECIFIED SURFACE, PER SAE AS478, METHOD 7A (ZONE C3).
9. SURFACE TREAT ENTIRE PART PER MIL-C-5541 USE IRIDITE 14.2 OR APPROVED EQUIVALENT PER MIL-C-81706, CLASS 3, FORM 11, METHOD B OR C AS APPLICABLE. SPOT TOUCH UP BY METHOD B.
10. HARD FLAT BLACK ANODIZE INTERIOR AND EXTERIOR SURFACES PER MIL-A-8625, TYPE III, CLASS 2.
11. CLEAN SURFACES WITH 190 PROOF ETHYL ALCOHOL. WIPE WITH CLEAN COTTON SWABS AND/OR LINT-FREE CLOTH.
12. HANDLE WITH CLEAN, LINT FREE GLOVES.
13. BEFORE STORAGE, PROTECT WITH CONTAMINATION BARRIER. USE CLEAN, NEW, TRANSPARENT, POLYETHYLENE BAG SEALED WITH FIBERGLASS PACKAGING TAPE. SEAL AND MARK WITH IDENTIFICATION NUMBER ON TAG ATTACHED TO BAG.
14. PROCESS PLAN REQUIRED.
15. ESTIMATED WEIGHT= 0.201 Kg.

UNLESS OTHERWISE SPECIFIED:
1. ALL DIMENSIONING AND TOLLERANCING PER ASME Y14.5M-1994
2. ALL DIMENSIONS ARE IN MILLIMETERS
3. BREAK EDGES: 0.2-0.5
4. LINEAR TOLERANCES:
   0.5-6 ±0.1
   OVER 6-30 ±0.2
   OVER 30- 120 ±0.3
   OVER 120-315 ±0.5
   OVER 315-1000 ±0.8
   OVER 1000-2000 ±1.2
5. ANGULAR TOLERANCES: 0° 30′

METRIC

THIRD ANGLE PROJECTION

DRAFTER	ADF/N.McMASTER
DESIGNER	ADF/J.VAN TASSEL
ENGINEER	ANLX/J.CZERNEC
MODEL NAME: 67212MEDM962	
PRO/E VERSION: 19.0	
RELEASE DATE: 06/18/99	

CHG	ZONE	DESCRIPTION	APP/DATE

REVISIONS

NATIONAL AERONAUTICS AND SPACE ADMINISTRATION
LEWIS RESEARCH CENTER
CLEVELAND, OHIO

962 QD MOUNTING BRACKET, FIXED CONNECTION

ADSORBER CARTRIDGE BRACKET ASSEMBLY, FIXED CONNECTION

67212MELM960

SIZE	DRAWING NUMBER	REV	STAT	BLDG/CELL
A1	67212MEDM962	-	R	333/-

SCALE: 1:1 SHEET 1 OF 1

DRAWING NUMBER 67212MEDM962 REV - STAT R

NAME:EDJEN OBJECT:67212MEDM962 DATE:30-Oct-00 13:23:00