COMMERCIAL PARTS LIST

PART TYPE	BALLOON NO	DRAWING NUMBER	DESCRIPTION	QTY/ ASSY
C	1	XXXXXXXXXXXX	INSERT, MINIATURE, METRIC, INTERNAL THREAD LOCKING, KEYED, TYPE 303 STAINLESS STEEL, KEENSERT PART NO. KNCML 3X0.5 (FOR M3 X 0.5 FASTENER)	4

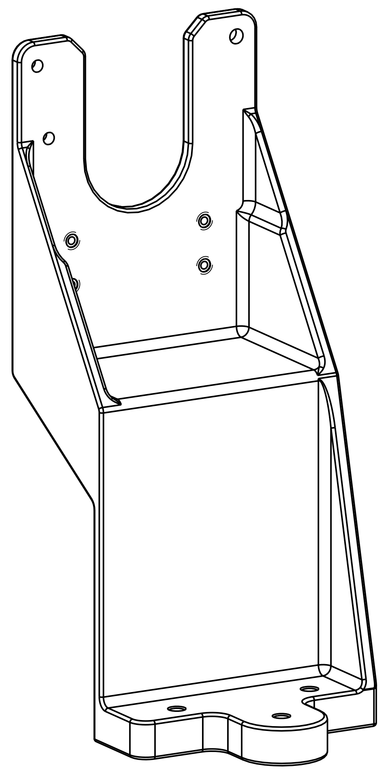

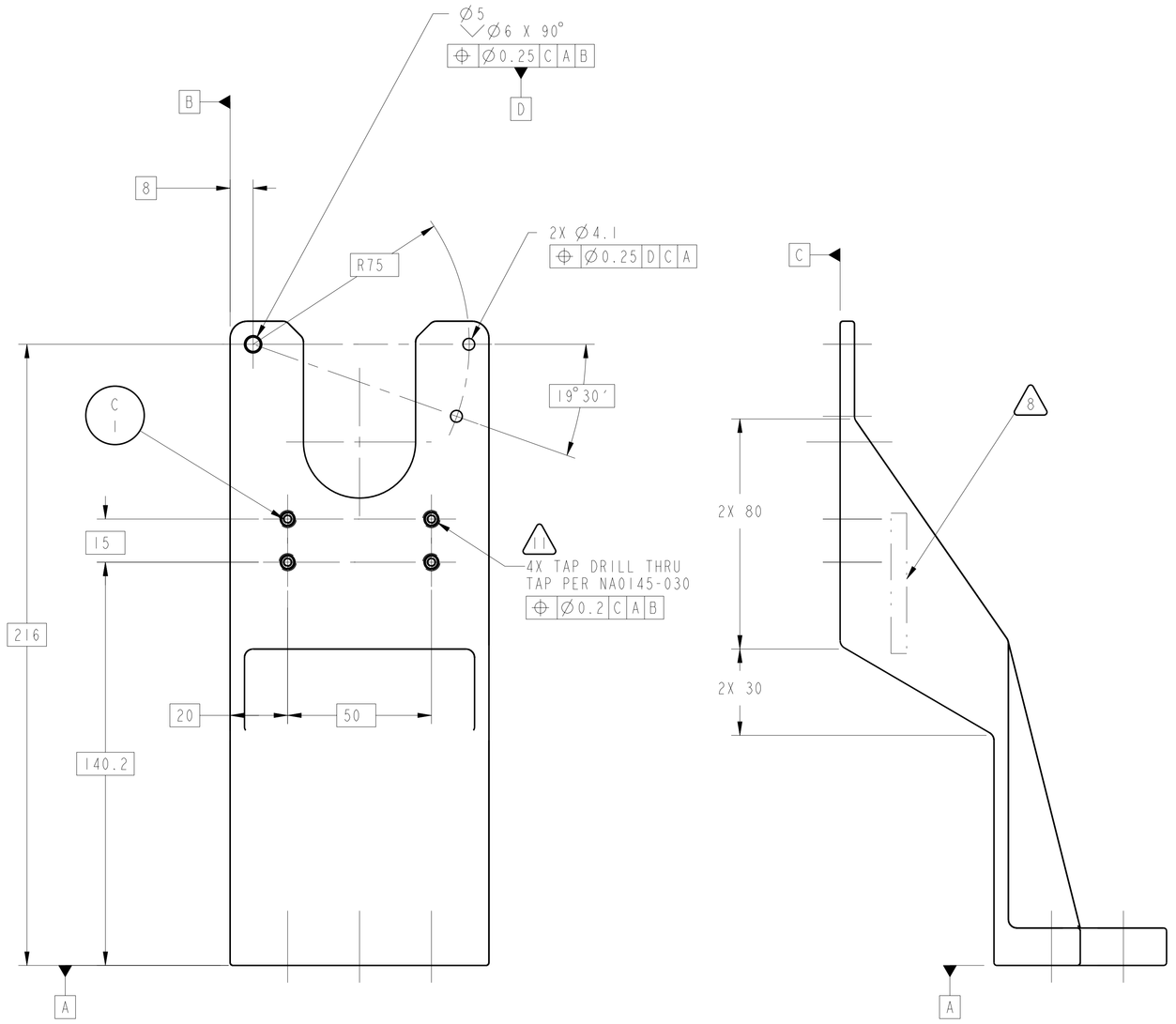

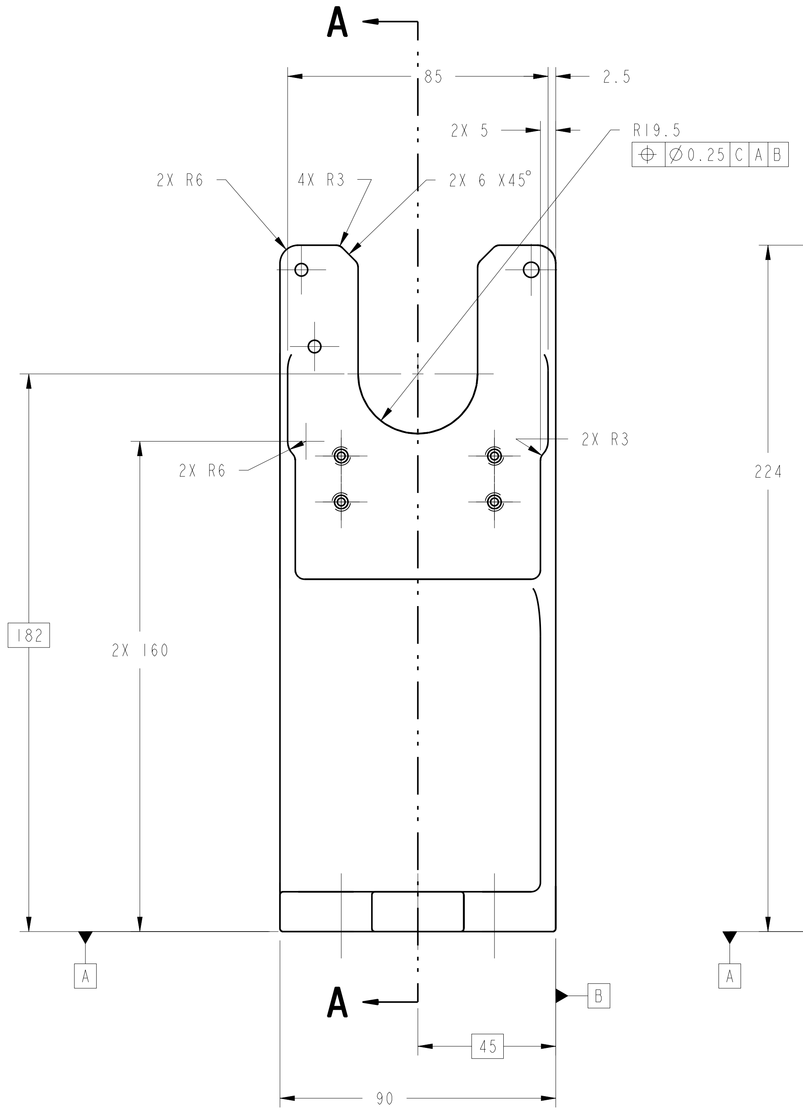

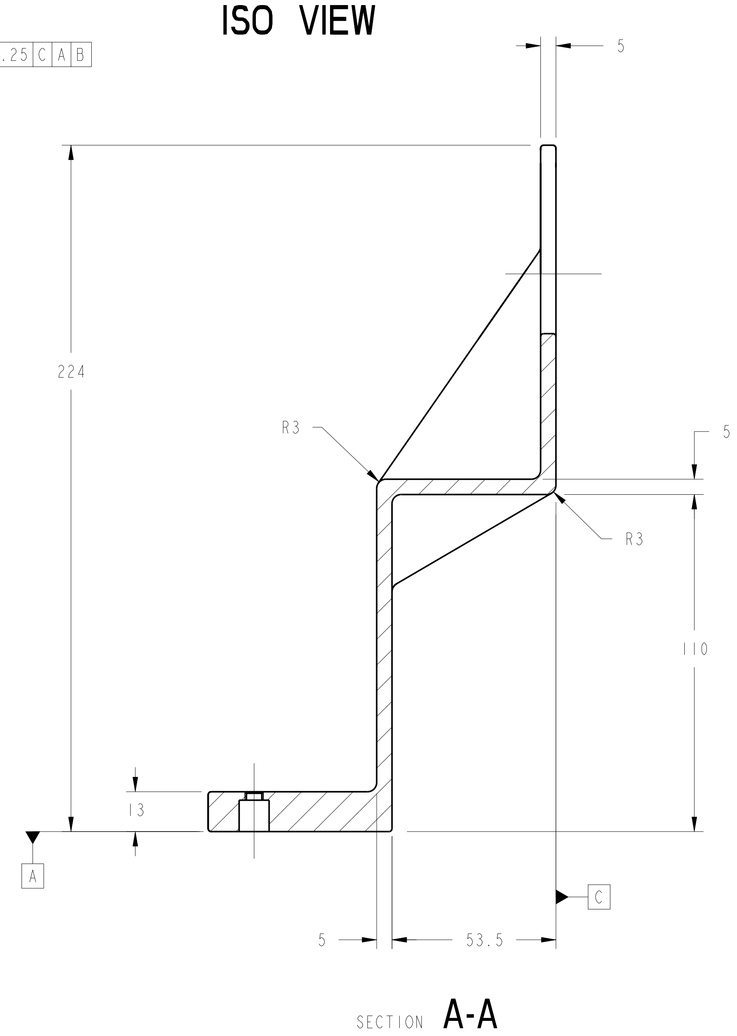

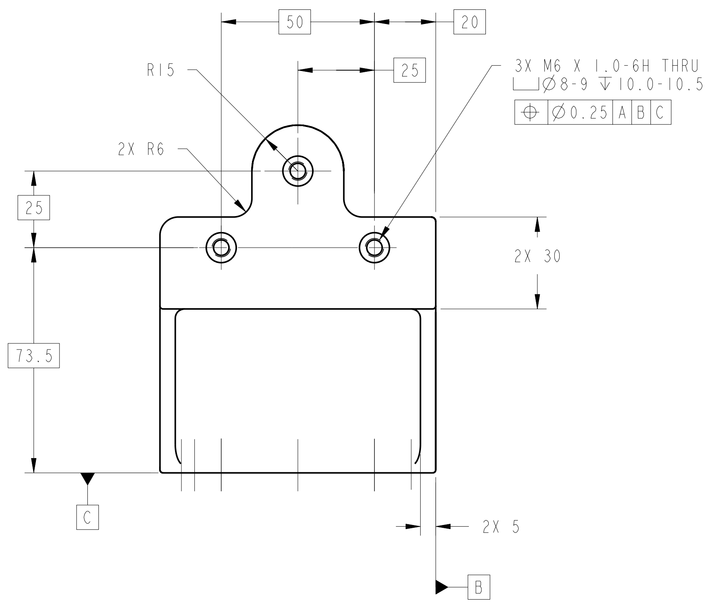

1. MATERIAL: 6061-T651 ALUMINUM PER FEDERAL SPEC QQ-A-250/11.
2. CERTIFICATION OF CHEMICAL AND MECHANICAL PROPERTIES IS REQUIRED.
3. ULTRASONIC INSPECT PER MIL-STD-2154, PRIOR TO FABRICATION. ACCEPTANCE PER SECTION 5.5.4., TABLE VI, CLASS LEVEL A.
4. 1.6 Ra ALL MACHINED SURFACES PER ANSI/ASME B46.1.
5. ALL EXTERNAL CORNER RADII TO BE R1-1.5 UNLESS OTHERWISE SPECIFIED.
6. ALL INTERNAL FILLET RADII TO BE R3 UNLESS OTHERWISE SPECIFIED.
7. ROUGH MACHINED AND FINISHED PART MUST PASS DYE PENETRANT INSPECTION PER ASTM E1417, ACCEPTANCE PER MIL-STD-1907.
8. ELECTROCHEMICAL ETCH DRAWING PART NUMBER 67212MEDM961 ON SPECIFIED SURFACE, PER SAE AS478, METHOD 7A (ZONE E8).
9. SURFACE TREAT ENTIRE PART PER MIL-C-5541 USE IRIDITE 14.2 OR APPROVED EQUIVALENT PER MIL-C-81706, CLASS 3, FORM II, METHOD B OR C, AS APPLICABLE, PRIOR TO INSTALLING THREADED INSERTS. SPOT TOUCH UP BY METHOD B.
10. HARD FLAT BLACK ANODIZE INTERIOR AND EXTERIOR SURFACES PER MIL-A-8625, TYPE III, CLASS 2, PRIOR TO INSTALLING THREADED INSERTS.
11. INSTALL KEENSERTS PER MANUFACTURERS SPECIFICATIONS AFTER SURFACE TREATMENT PER NOTES 9 AND 10.
12. CLEAN SURFACES WITH 190 PROOF ETHYL ALCOHOL. WIPE WITH CLEAN COTTON SWABS AND/OR LINT-FREE CLOTH.
13. HANDLE WITH CLEAN, LINT FREE GLOVES.
14. BEFORE STORAGE, PROTECT WITH CONTAMINATION BARRIER. USE CLEAN, NEW, TRANSPARENT, POLYETHYLENE BAG SEALED WITH FIBERGLASS PACKAGING TAPE. SEAL AND MARK WITH IDENTIFICATION NUMBER ON TAG ATTACHED TO BAG.
15. PROCESS PLAN REQUIRED.
16. ESTIMATED WEIGHT= 0.496 Kg.

UNLESS OTHERWISE SPECIFIED:
1. ALL DIMENSIONING AND TOLLERANCING PER ASME Y14.5M-1994
2. ALL DIMENSIONS ARE IN MILLIMETERS
3. BREAK EDGES: 0.2-0.5
4. LINEAR TOLERANCES:
   0.5-6 ±0.1
   OVER 6-30 ±0.2
   OVER 30-120 ±0.3
   OVER 120-315 ±0.5
   OVER 315-1000 ±0.8
   OVER 1000-2000 ±1.2
5. ANGULAR TOLERANCES: 0° 30'

METRIC

THIRD ANGLE PROJECTION

DRAFTER	ADF/N.McMASTER
DESIGNER	ADF/J.VAN TASSEL
ENGINEER	ANLX/J.CZERNEC
MODEL NAME: 67212MEDM961	
PRO/E VERSION: 19.0	
RELEASE DATE: 06/18/99	

CHG	ZONE	DESCRIPTION	APP/DATE

REVISIONS

NATIONAL AERONAUTICS AND SPACE ADMINISTRATION
LEWIS RESEARCH CENTER
CLEVELAND, OHIO

961 ADSORBER CARTRIDGE BRACKET, FIXED CONNECTION

ADSORBER CARTRIDGE BRACKET ASSEMBLY, FIXED CONNECTION 67212MEDM960

SIZE	DRAWING NUMBER	REV	STAT	BLDG/CELL
A0	67212MEDM961	-	R	333/-

SCALE: 1:1 SHEET 1 OF 1

67212MEDM961

NAME:EDEN OBJECT:67212MEDM961 DATE:20-Oct-00 13:22:35