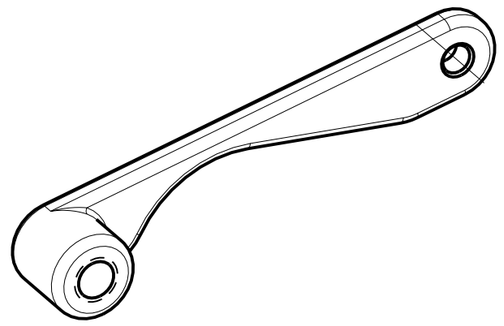

ISO VIEW

TANGENT EDGE LINES SHOWN

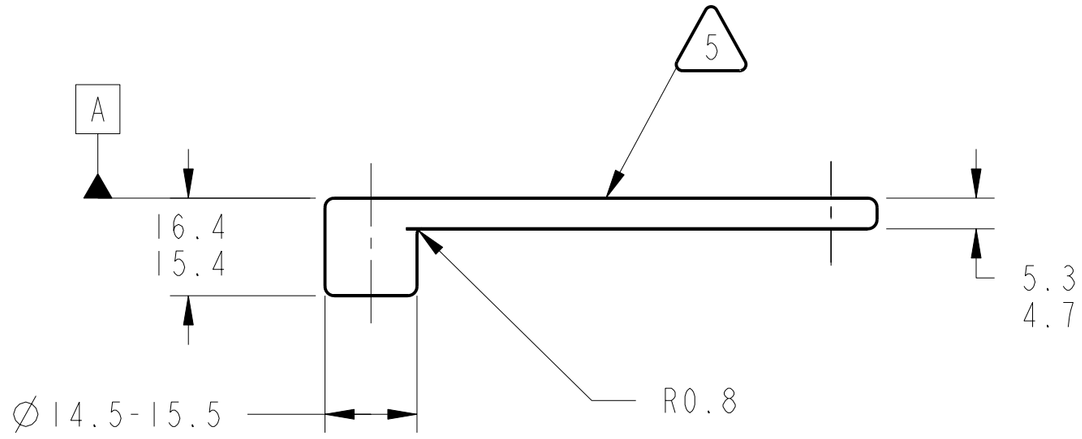

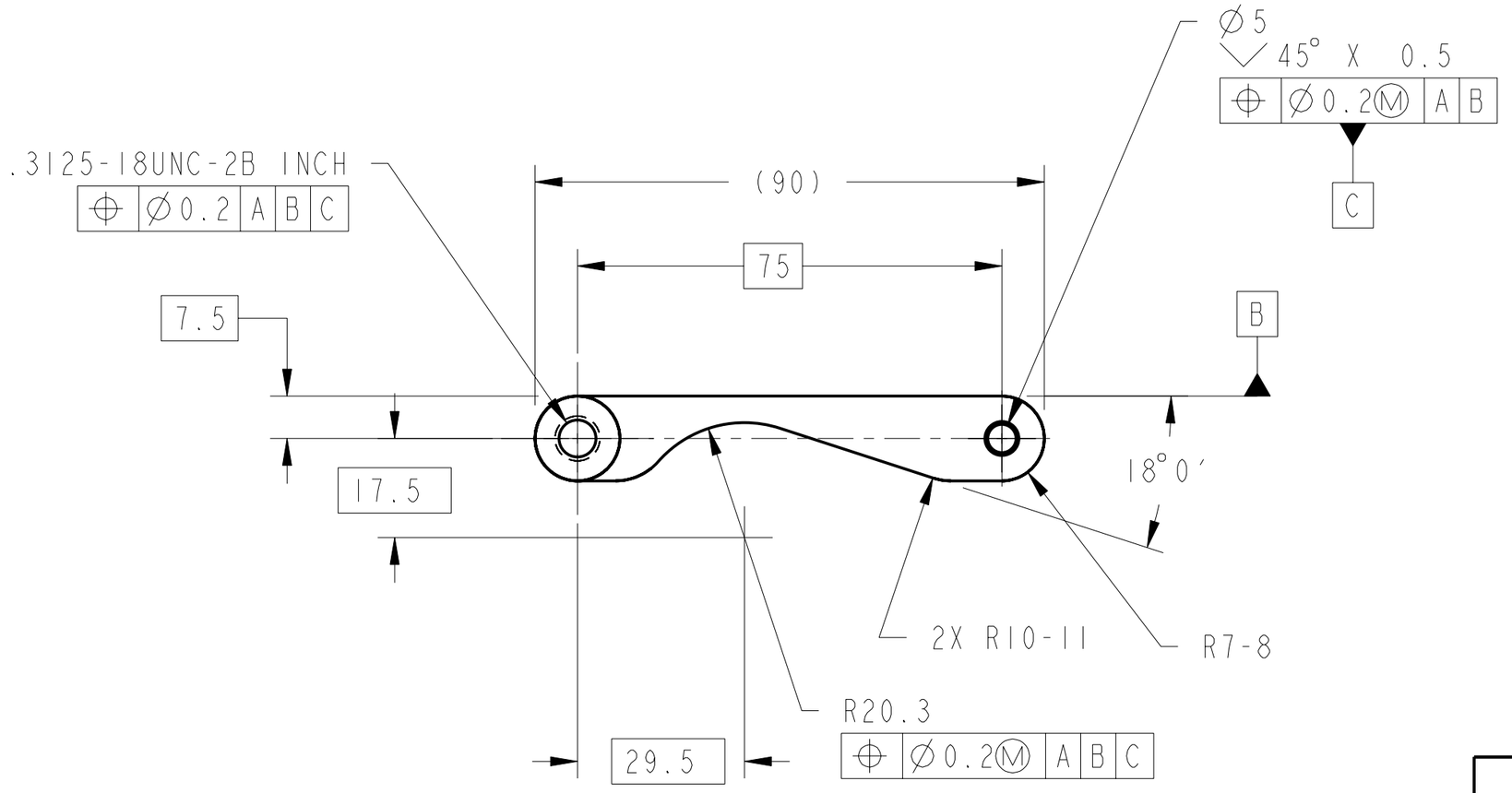

1. MATERIAL:6061-T651 ALUMINUM PER FEDERAL SPEC QQ-A-250/11.
2. CERTIFICATION OF CHEMICAL AND MECHANICAL PROPERTIES REQUIRED.
3. 1.6 Ra ALL MACHINED SURFACES.
4. ALL OUTSIDE CORNERS TO BE R1.5.
5. ELECTROCHEMICAL ETCH DRAWING PART NUMBER 67212MEDM957 ON SPECIFIED SURFACE PER SAE AS478, METHOD 7A (ZONE D4).
6. SURFACE TREAT ENTIRE PART PER MIL-C-5541 USE IRIDITE 14.2 OR APPROVED EQUIVALENT PER MIL-C-81706, CLASS 3, FORM 11, METHOD B OR C AS APPLICABLE. SPOT TOUCH UP BY METHOD B.
7. HARD FLAT BLACK ANODIZE PER MIL-A-8625, TYPE III, CLASS 2. ALL DIMENSIONS APPLY AFTER ANODIZING.
8. CLEAN SURFACES WITH 190 PROOF ETHYL ALCOHOL. WIPE WITH CLEAN LINT FREE CLOTH
9. HANDLE WITH CLEAN, LINT-FREE GLOVES.
10. BEFORE STORAGE, PROTECT WITH CONTAMINATION BARRIER. USE CLEAN, NEW, TRANSPARENT, POLYETHYLENE BAG SEALED WITH FIBERGLASS PACKAGING TAPE. SEAL AND MARK WITH IDENTIFICATION NUMBER ON TAG ATTACHED TO BAG.
11. PROCESS PLAN REQUIRED.
12. ESTIMATED WEIGHT: 0.017 Kg.

UNLESS OTHERWISE SPECIFIED:

1. ALL DIMENSIONING AND TOLLERANCING PER ASME Y14.5M-1994
2. ALL DIMENSIONS ARE IN MILLIMETERS
3. BREAK EDGES: 0.2-0.5
4. LINEAR TOLERANCES:
   - 0.5-6 ±0.1
   - OVER 6-30 ±0.2
   - OVER 30- 120 ±0.3
   - OVER 120-315 ±0.5
   - OVER 315-1000 ±0.8
   - OVER 1000-2000 ±1.2
5. ANGULAR TOLERANCES: 0° 30′

METRIC

THIRD ANGLE PROJECTION

DRAFTER	ADF/W. HOLT
DESIGNER	ADF/J. VAN TASSEL
ENGINEER	ANLX/J. CZERNAC
MODEL NAME: 67212MEDM957	
PRO/E VERSION: 19.0	
RELEASE DATE: 06/18/99	

CHG	ZONE	DESCRIPTION	APP/DATE

REVISIONS

NATIONAL AERONAUTICS AND SPACE ADMINISTRATION
LEWIS RESEARCH CENTER
CLEVELAND, OHIO

957 ADSORBER CARTRIDGE LOCK LEVER-LEFT

ADSORBER CARTRIDGE BRACKET ASSEMBLY, FLOATING CONNECTION 67212MELM965

SIZE	DRAWING NUMBER	REV	STAT	BLDG/CELL
A2	67212MEDM957	-	R	333/ -

SCALE: 1:1 SHEET 1 OF 1

DRAWING NUMBER 67212MEDM957

REV - STAT R

NAME:EDJEN OBJECT:67212MEDM957 DATE:30-Oct-00 13:21:48