COMMERCIAL PARTS LIST

PART TYPE	BALLOON NO	DESCRIPTION	QTY/ ASSY	
C	1	GLAND, SHORT TUBE BUTT WELD, "SWAGELOK" PART NUMBER 6LV-4-VCR-3S-4TB3	1	9
C	2	FEMALE NUT, "SWAGELOK" PART NUMBER SS-4-VCR-1	1	9

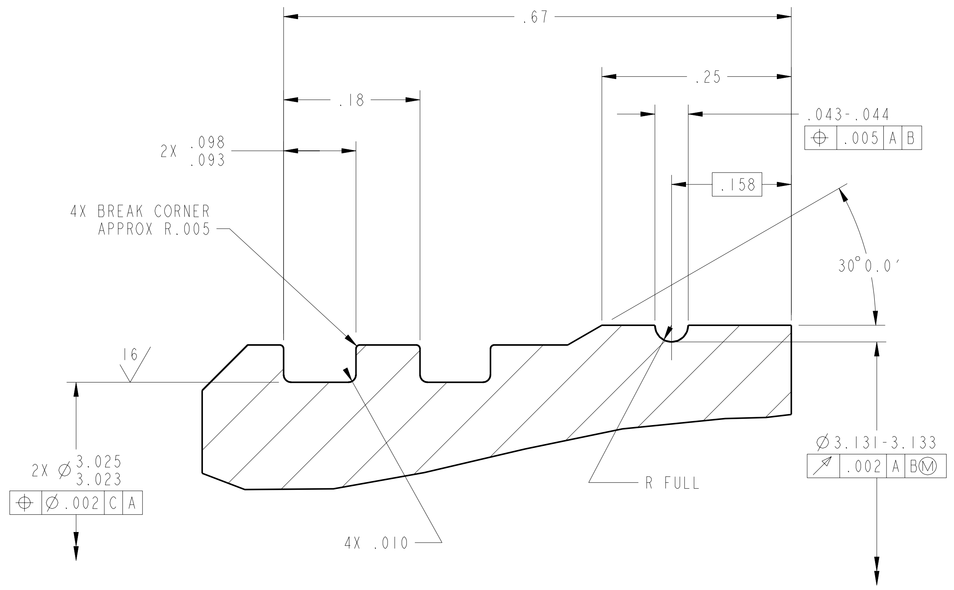

DETAIL C
SCALE 10/1

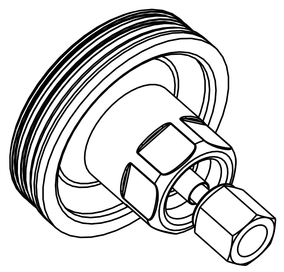

ISO VIEW
TANGENT EDGE LINES SHOWN

1. MATERIAL: TYPE 316 STAINLESS STEEL PER QQ-S-766.
2. CERTIFICATION OF CHEMICAL AND MECHANICAL PROPERTIES IS REQUIRED.
3. ULTRASONIC INSPECT PER MIL-STD-2154, PRIOR TO FABRICATION. ACCEPTANCE PER SECTION 5.5.4., TABLE VI, CLASS LEVEL A.
4. 32 Ra ALL MACHINED SURFACES UNLESS OTHERWISE NOTED PER ANSI/ASME B46.1.
5. FINISHED PART MUST PASS DYE PENETRANT INSPECTION PER ASTM E1417. ACCEPTANCE PER MIL-STD-1907.
6. WELD PER MIL-STD-2219, CLASS A. INSPECT PR MIL-STD-2219, SECTION 5.4.
7. ELECTROCHEMICAL ETCH DRAWING PART NUMBER 67212MEDM956 ON SPECIFIED SURFACE, PER SAE AS478, METHOD 7A (ZONE D4).
8. CLEAN AND PASSIVATE PER MIL-S-5002, PARAGRAPHS 3.4.2.4 AND 3.4.2.4.1 AND FEDERAL SPECIFICATION QQ-P-35.
9. PROTECT EXISTING THREADS AND SEALING SURFACES FROM ANY DAMAGE.
10. CLEAN SURFACES WITH 190 PROOF ETHYL ALCOHOL. WIPE WITH CLEAN COTTON SWABS AND/OR LINT-FREE CLOTH.
11. HANDLE WITH CLEAN, LINT-FREE GLOVES.
12. BEFORE STORAGE, PROTECT WITH CONTAMINATION BARRIER. USE CLEAN, NEW, TRANSPARENT, POLYETHYLENE BAG SEALED WITH FIBERGLASS PACKAGING TAPE. SEAL AND MARK WITH IDENTIFICATION NUMBER ON TAG ATTACHED TO BAG.
13. PROCESS PLAN REQUIRED.
14. ESTIMATED WEIGHT= 1.309 Lb. (0.595 Kg)

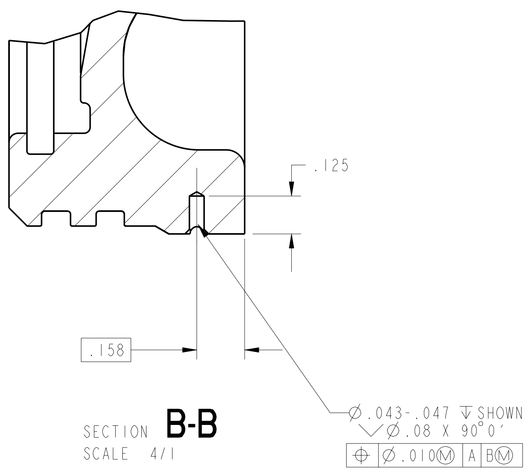

SECTION B-B
SCALE 4/1

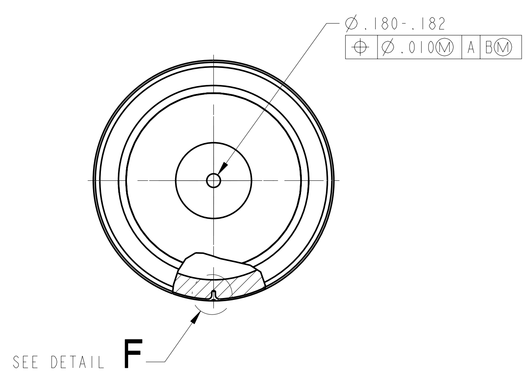

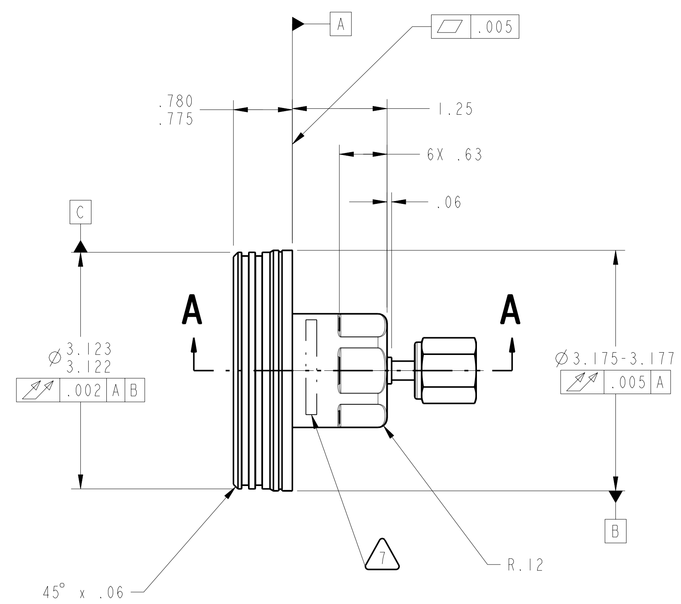

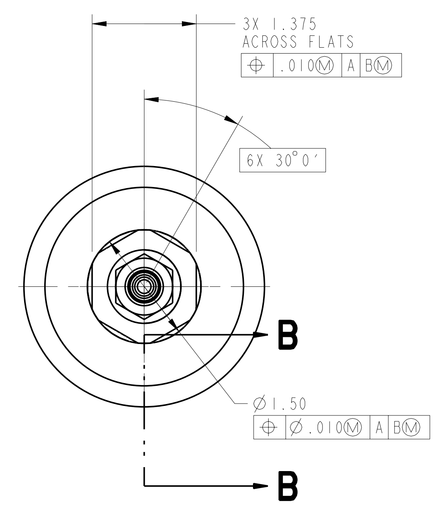

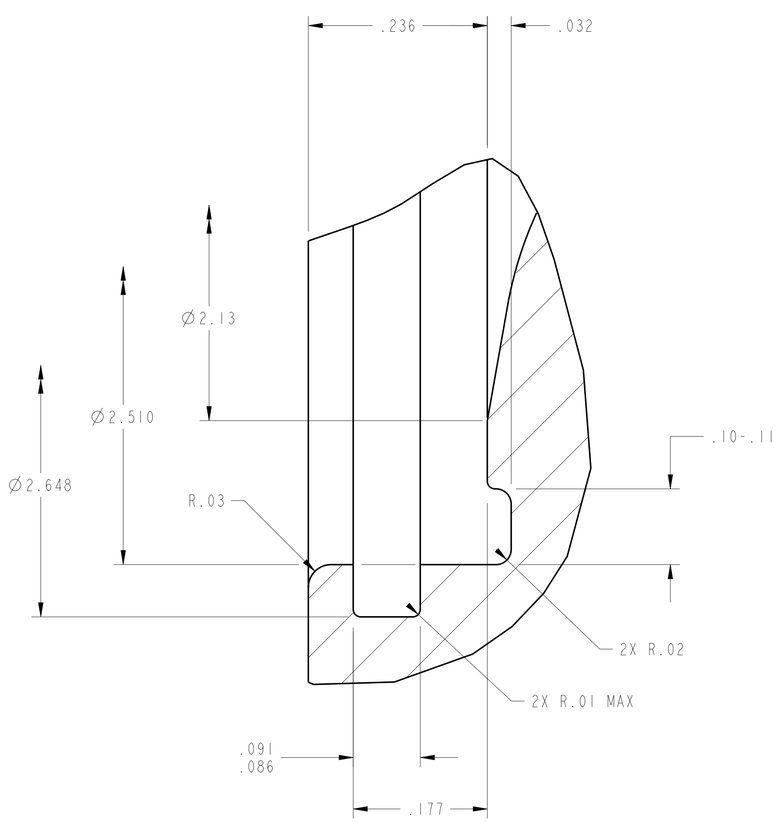

DETAIL D
SCALE 10/1

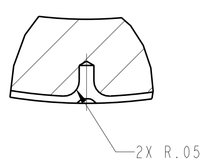

DETAIL F
SCALE 4/1

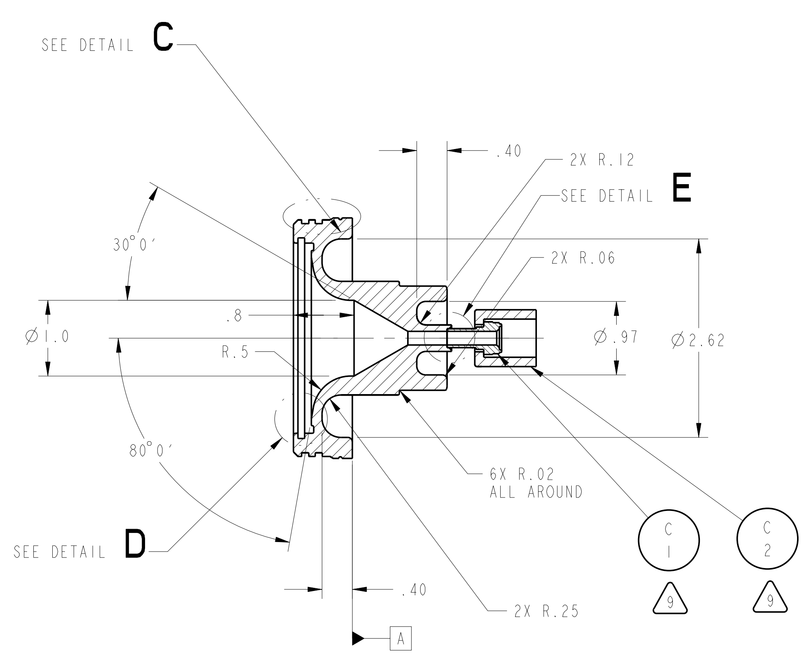

SECTION A-A

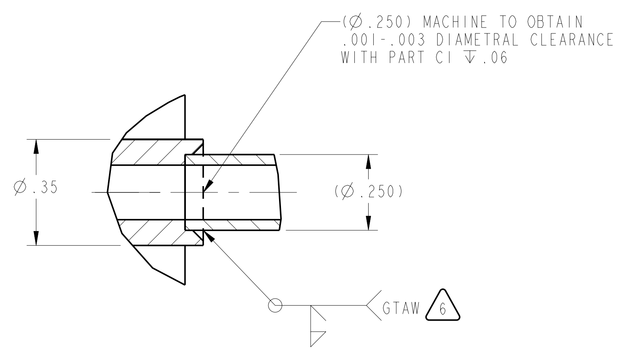

DETAIL E
SCALE 4/1

CHG	ZONE	DESCRIPTION	APP/DATE

REVISIONS

UNLESS OTHERWISE SPECIFIED DIMENSIONS ARE IN INCHES		CONTRACT	NAS3-27600
		CONTRACTOR	ADF, INC.
TOLERANCE ON		TASK ORDER	060
.X	± 0.03	APPROVED	-
.XX	± 0.01	DRAFTER	ADF/W. HOLT
.XXX	± 0.005	ENGINEER	ANLX/I. DRALYUK
FRACTION	± -	DESIGNER	ADF/J. VAN TASSEL
ANGULAR	± 0.50°	MODEL NAME: 67212MEDM956	
BREAK EDGES	.005-.010	PRO/E VERSION: 19.0	
DIMENSIONING AND TOLERANCING PER ASME Y14.5M-1994		RELEASE DATE	06/18/99

NATIONAL AERONAUTICS AND SPACE ADMINISTRATION
LEWIS RESEARCH CENTER
CLEVELAND, OHIO

956

THREE INCH DIAMETER END CAP WELDMENT

THREE INCH DIAMETER END CAP ASSEMBLY

67212MELM950

SIZE	DRAWING NUMBER	REV	STAT	BLDG/CELL
E	67212MEDM956	-	R	333/ -

SCALE: 1/1 AND NOTED — SHEET 1 OF 1

DRAWING NUMBER 67212MEDM956 REV - STAT R