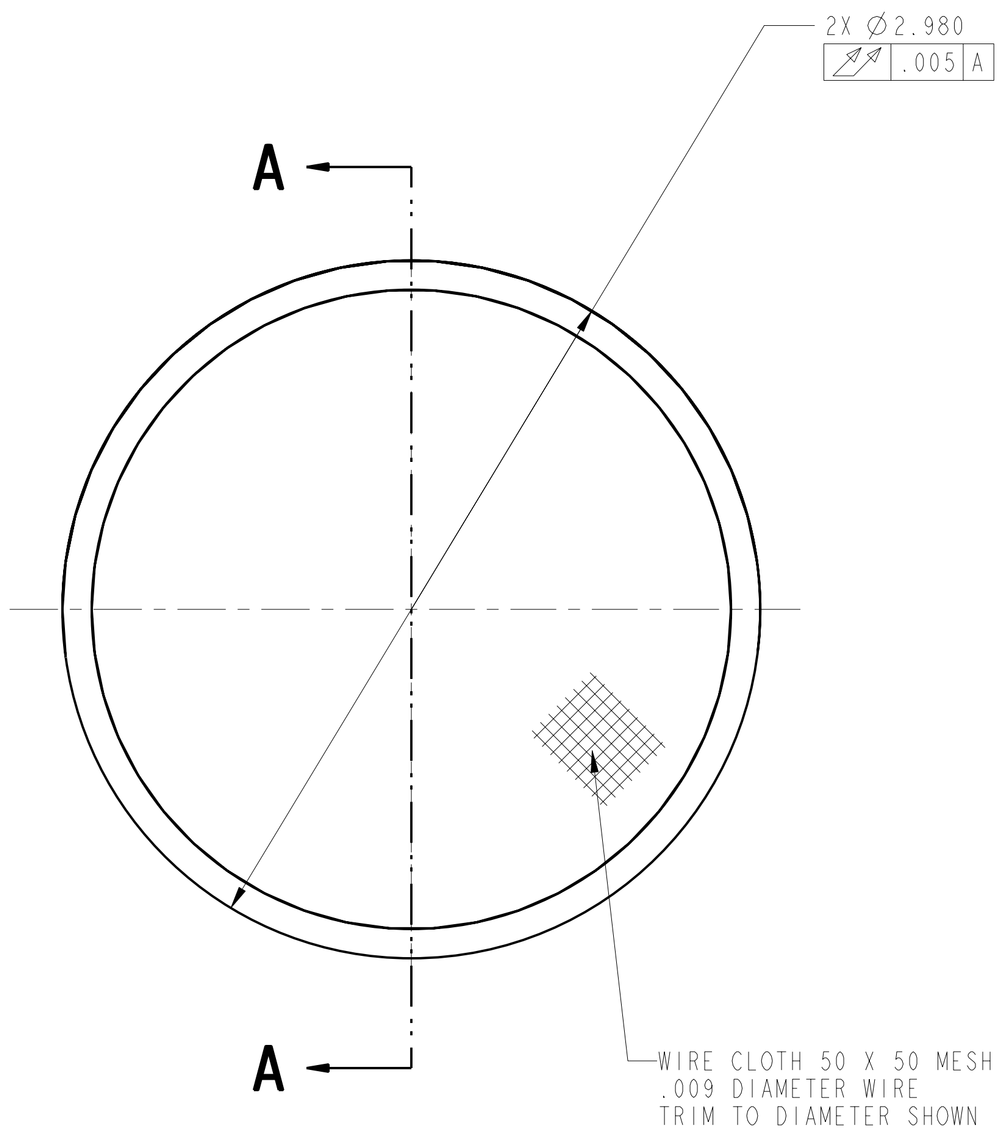

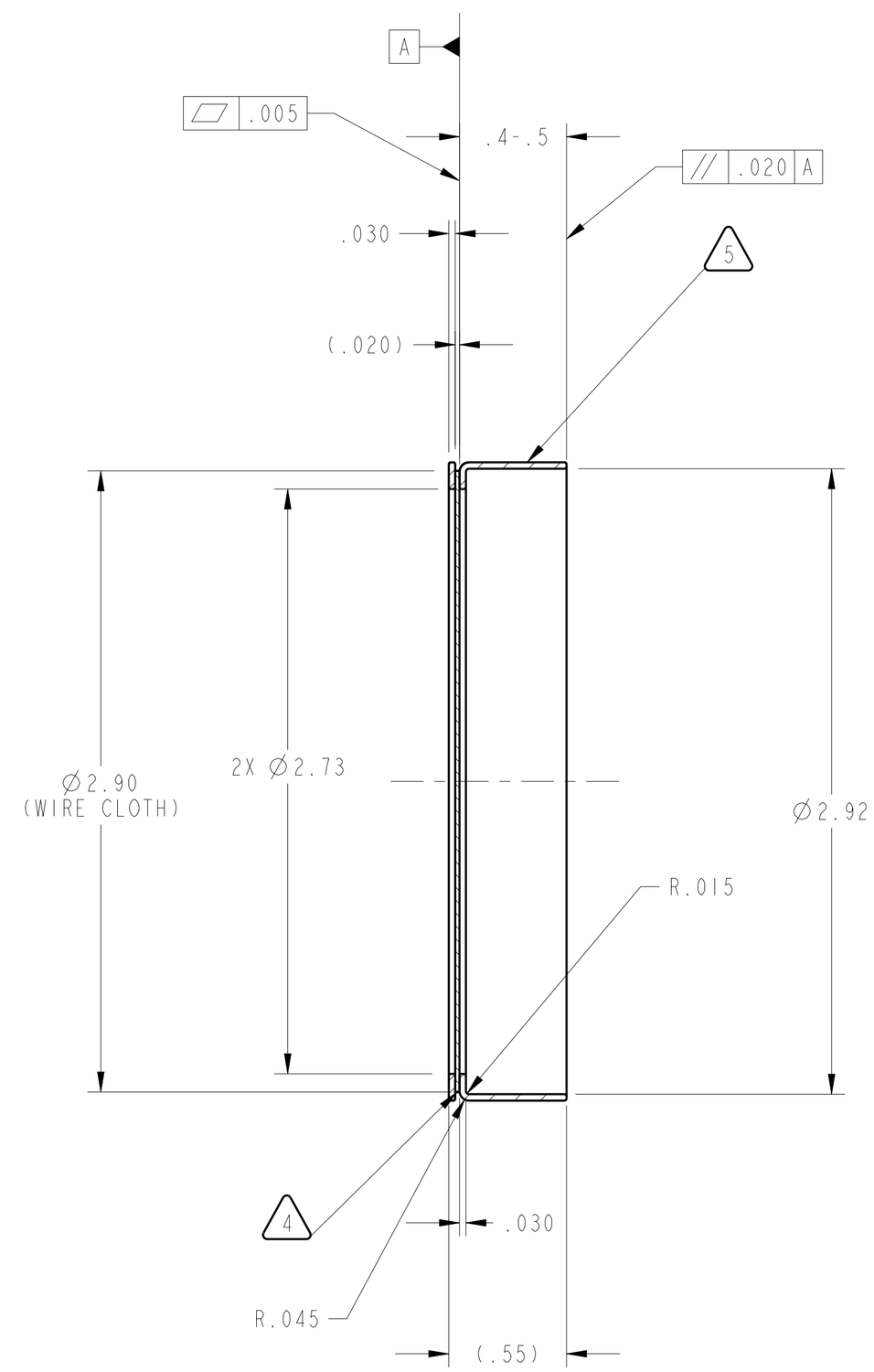

SECTION **A-A**

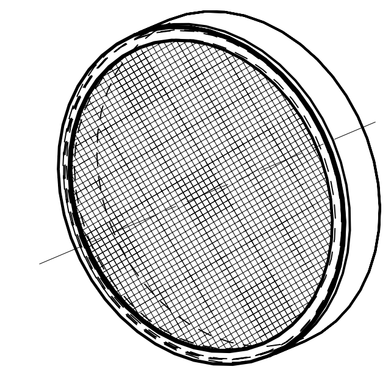

ISO VIEW
SCALE 1/1
(TANGENT LINES SHOWN)

1. MATERIAL:TYPE 316 STAINLESS STEEL, PER QQ-S-766.
2. CERTIFICATE OF CONFORMANCE REQUIRED FOR MATERIALS.
3. 32 Ra ALL MACHINED SURFACES PER ANSI/ASME B46.1.
4. VACUUM FURNACE BRAZE ASSEMBLY USING AWS A5.8, CLASS BAg-21 FILLER, COOL IN FURNACE, USING INERT ATMOSPHERE, AS PER AWS B2.2.
5. ELECTROCHEMICAL ETCH DRAWING PART NUMBER 67212MEDM953 ON SPECIFIED SURFACE, PER SAE AS478, METHOD 7A (ZONE D3).
6. CLEAN AND PASSIVATE PER MIL-S-5002, PARAGRAPHS 3.4.2.4 AND 3.4.2.4.1, AND QQ-P-35.
7. CLEAN SURFACES WITH 190 PROOF ETHYL ALCOHOL. WIPE WITH CLEAN LINT FREE CLOTH
8. HANDLE WITH CLEAN, LINT-FREE GLOVES.
9. BEFORE STORAGE, PROTECT WITH CONTAMINATION BARRIER. USE CLEAN, NEW, TRANSPARENT, POLYETHYLENE BAG SEALED WITH FIBERGLASS PACKAGING TAPE. SEAL AND MARK WITH IDENTIFICATION NUMBER ON TAG ATTACHED TO BAG.
10. PROCESS PLAN REQUIRED.
11. ESTIMATED WEIGHT: 0.082 Lb. (0.037 Kg.)

CHG	ZONE	DESCRIPTION	APP/DATE
A	A1 C1 A7	DWG NO. WAS 67212MELM953 CORRECTED NOTE 9 CLOTH WAS 100 X 100 MESH & .010 DIA WIRE	D.A.R. 06/22/99

REVISIONS

UNLESS OTHERWISE SPECIFIED DIMENSIONS ARE IN INCHES	
TOLERANCE ON	
.X	± 0.1
.XX	± 0.01
.XXX	± 0.005
FRACTION	± -
ANGULAR	± 0.50°
BREAK EDGES	.005-.010
DIMENSIONING AND TOLERANCING PER ASME Y14.5M-1994	

CONTRACT	NAS3-27600
CONTRACTOR	ADF, INC.
TASK ORDER	060
APPROVED	-
DRAFTER	ADF/D.ROBINSON
ENGINEER	ANLX/J.CZERNEC
DESIGNER	ADF/J.VAN TASSEL
MODEL NAME: 67212MEDM953	
PRO/E VERSION: 19.0	
RELEASE DATE	06/10/99

NATIONAL AERONAUTICS AND SPACE ADMINISTRATION
LEWIS RESEARCH CENTER
CLEVELAND, OHIO

953 THREE INCH DIAMETER SCREEN ASSEMBLY

THREE INCH DIAMETER ADSORBER CARTRIDGE ASSEMBLY 67212MELM950

SIZE	DRAWING NUMBER	REV	STAT	BLDG/CELL
D	67212MEDM953	-	R	333/-

SCALE: 2/1 AND NOTED — SHEET 1 OF 1

DRAWING NUMBER 67212MEDM953 — REV - — STAT R

NAME:EDWER — 08-OCT-2212:MEDM953 — DATE:10-Oct-00 13:20:32