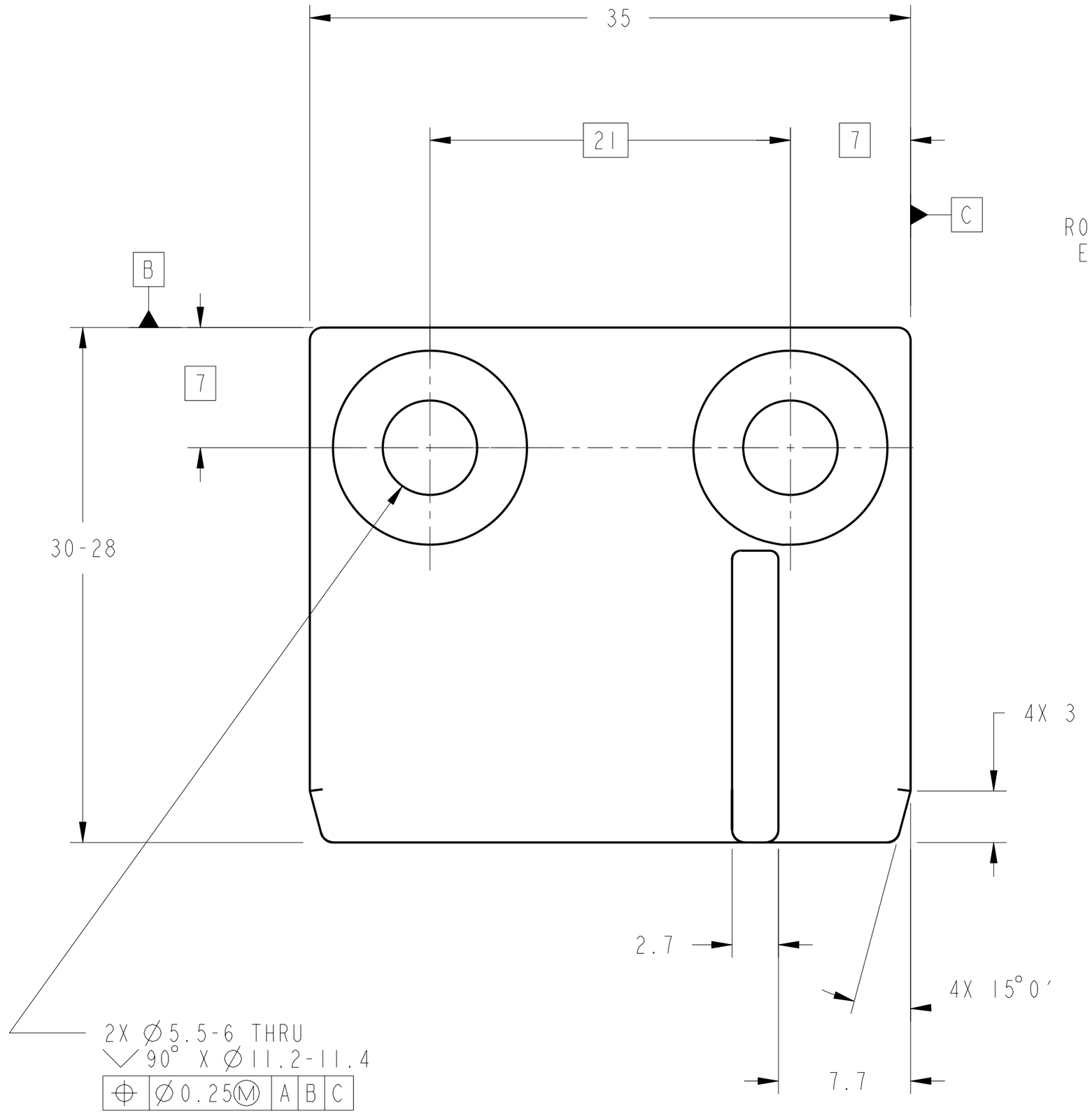

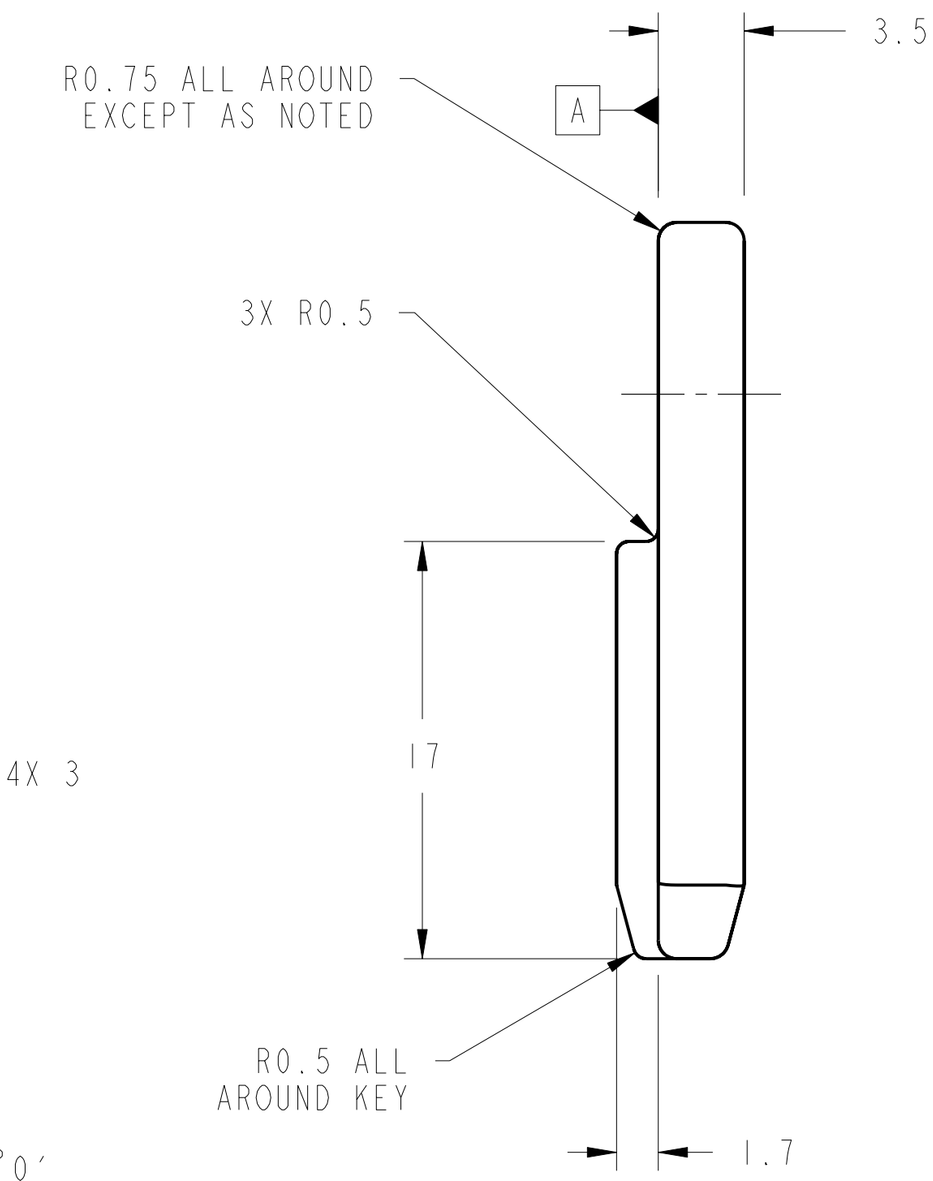

1. MATERIAL:
   6061-T6 ALUMINUM PER FEDERAL SPEC QQ-A-250/11.
2. CERTIFICATE OF CONFORMANCE REQUIRED FOR MATERIAL.
3. 0.8 Ra ALL MACHINED SURFACES PER ANSI/ASME B46.1.
4. CLEAN SURFACES WITH 190 PROOF ETHYL ALCOHOL. WIPE WITH CLEAN COTTON SWABS AND/OR LINT-FREE CLOTH.
5. TREAT ALL SURFACES WITH XYLAN COATING-1010, COLOR GRAY, .001-.003 INCHES THICK. APPLY PER MANUFACTURER RECOMMENDED SPECIFICATIONS. ALL DIMENSIONS APPLY AFTER TREATMENT.
6. IDENTIFY BY TAGGING WITH DRAWING PART NUMBER 67212MEDM915, PER SAE AS478, METHOD 35.
7. BEFORE STORAGE, PROTECT WITH CONTAMINATION BARRIER. USE CLEAN, NEW, TRANSPARENT, POLYETHYLENE BAG SEALED WITH FIBERGLASS PACKAGING TAPE. SEAL AND MARK WITH IDENTIFICATION NUMBER ON TAG ATTACHED TO BAG.
8. PROCESS PLAN REQUIRED.
9. ESTIMATED WEIGHT: 0.009 Kg.
10. QUANTITY: ONE REQUIRED.

CHG	ZONE	DESCRIPTION	APP/DATE

REVISIONS

UNLESS OTHERWISE SPECIFIED:
1. ALL DIMENSIONING AND TOLLERANCING PER ASME Y14.5M-1994
2. ALL DIMENSIONS ARE IN MILLIMETERS
3. BREAK EDGES: 0.2-0.5
4. LINEAR TOLERANCES:
   0.5-6 ±0.1
   OVER 6-30 ±0.2
   OVER 30-120 ±0.3
   OVER 120-315 ±0.5
   OVER 315-1000 ±0.8
   OVER 1000-2000 ±1.2
5. ANGULAR TOLERANCES: 0° 30′

METRIC

THIRD ANGLE PROJECTION

DRAFTER	ADF/D.ROBINSON
DESIGNER	ADF/D.ROBINSON
ENGINEER	ANLX/D.CATALANO
MODEL NAME: 67212MEDM915	
PRO/E VERSION: 19.0	
RELEASE DATE: 12/29/98	

NATIONAL AERONAUTICS AND SPACE ADMINISTRATION
LEWIS RESEARCH CENTER
CLEVELAND, OHIO

915

NITROGEN/HIGH PRESSURE SUPPLY VALVE GUIDE PLATE

NITROGEN/HIGH PRESSURE SUPPLY VALVE ASSEMBLY 67212MELM903

SIZE	DRAWING NUMBER	REV	STAT	BLDG/CELL
A2	67212MEDM915	-	R	333/-

SCALE: 4:1 SHEET 1 OF 1

DRAWING NUMBER 67212MEDM915

STAT R REV -

NAME:EDJEN OBJECT:67212MEDM915 DATE:30-Oct-00 13:19:34