XXX XXX

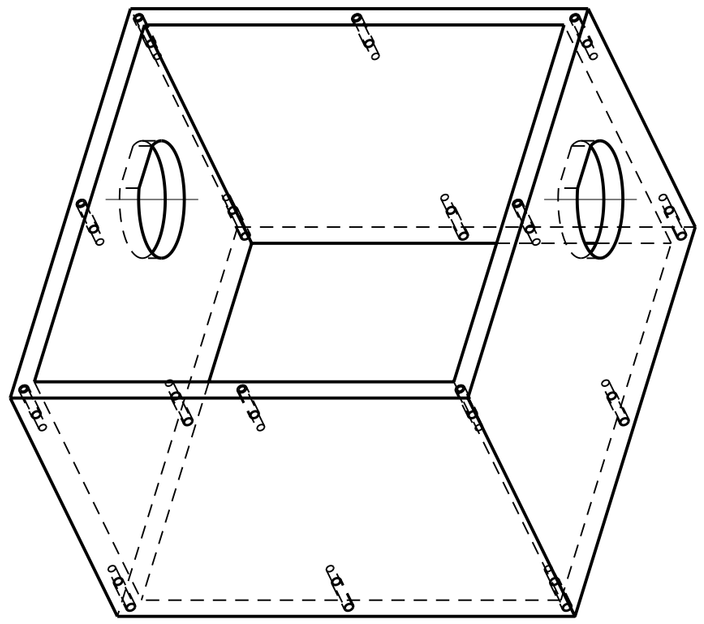

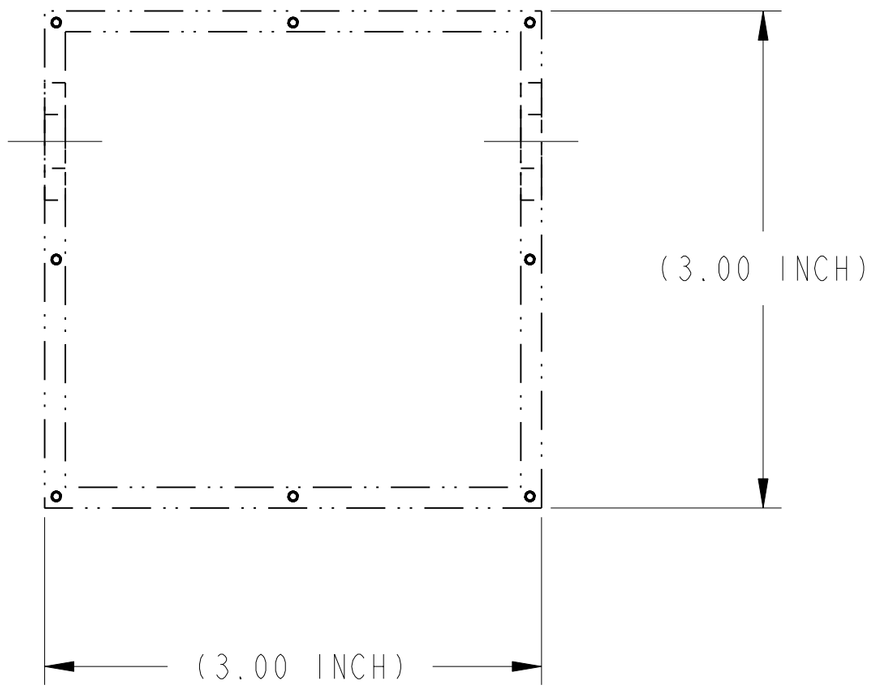

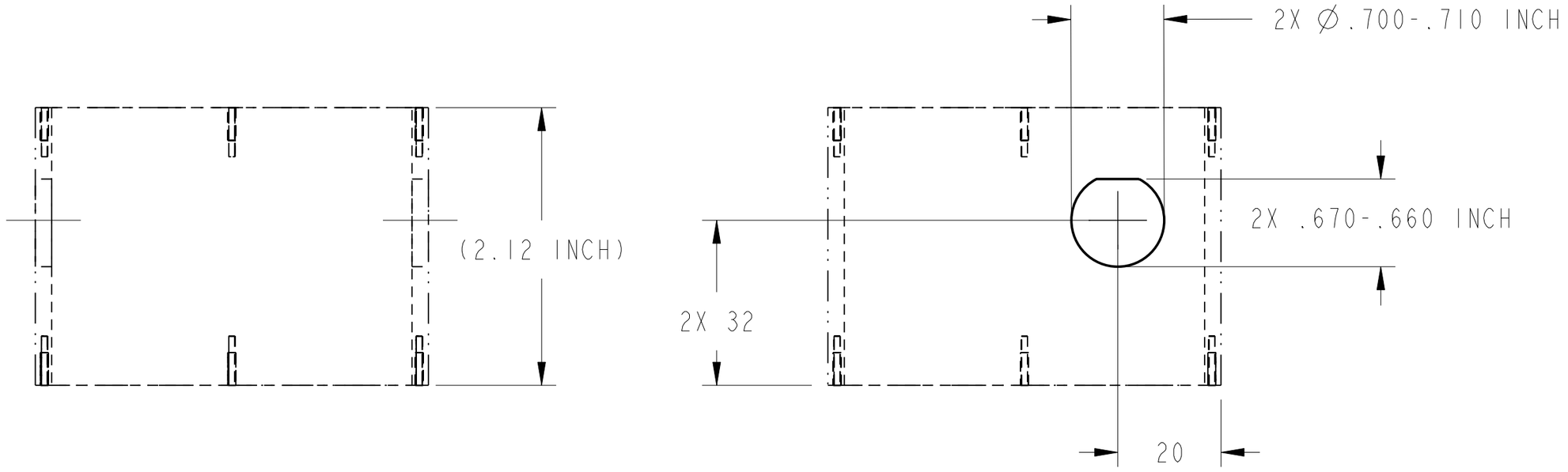

CHG	ZONE	DESCRIPTION	APP/DATE

REVISIONS

UNLESS OTHERWISE SPECIFIED:

1. ALL DIMENSIONING AND TOLERANCING PER ASME Y14.5M-1994
2. ALL DIMENSIONS ARE IN MILLIMETERS
3. BREAK EDGES: 0.2-0.5
4. LINEAR TOLERANCES:
   - 0.5-6 ±0.1
   - OVER 6-30 ±0.2
   - OVER 30-120 ±0.3
   - OVER 120-315 ±0.5
   - OVER 315-1000 ±0.8
   - OVER 1000-2000 ±1.2
5. ANGULAR TOLERANCES: 0° 30′

CONTRACT	NAS3-99155
CONTRACTOR	ANALEX CORP.
TASK ORDER	-
DRAFTER	LTHOMAS
ENGINEER	D.CATALANO
DESIGNER	LTHOMAS

THIRD ANGLE PROJECTION

NATIONAL AERONAUTICS AND SPACE ADMINISTRATION
JOHN H. GLENN RESEARCH CENTER
LEWIS FIELD
CLEVELAND, OHIO

DEWPOINT SENSOR ASSEMBLY

67212MELM600

CONPAC-RFT SERIES
PN NO. R51210-212-0-N/MOD

PDM REL LEVEL: PDM REVISION:

PDM DATABASE:

MODEL NAME: 67212MEDM601

PRIOR TO USE VERIFY THE INTENDED PURPOSE IN PDM ("FOR" ATTRIBUTE)

SIZE	DRAWING NUMBER	REV	BLDG	AREA
A2	67212MEDM601	-	110	117

UNITS: mm

SCALE:	INITIAL REL DATE	SHEET	DISCIPLINE
1:1	05/25/2000	1 OF 1	MECH.

PRO/E VERSION: 20.0

REV -

DRAWING NUMBER 67212MEDM601

SIZE A2

NAME:EDJEN OBJECT:67212MEDM601 DATE:30-Oct-00 13:16:34