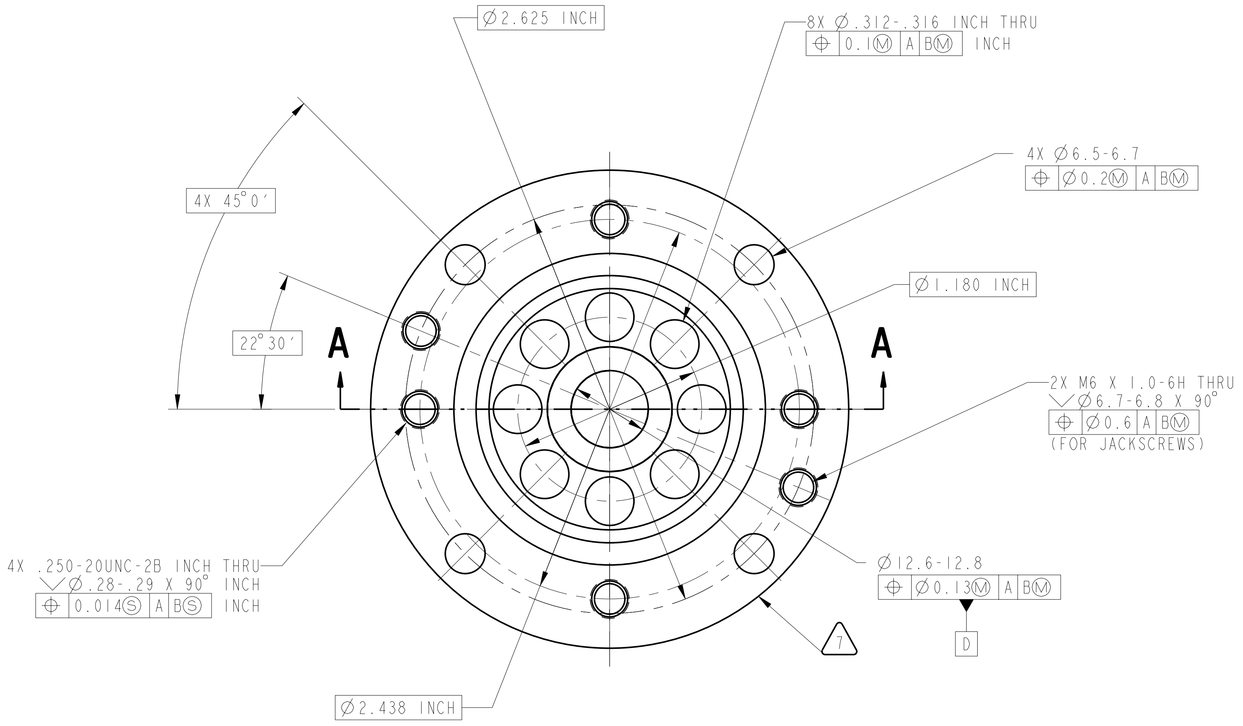

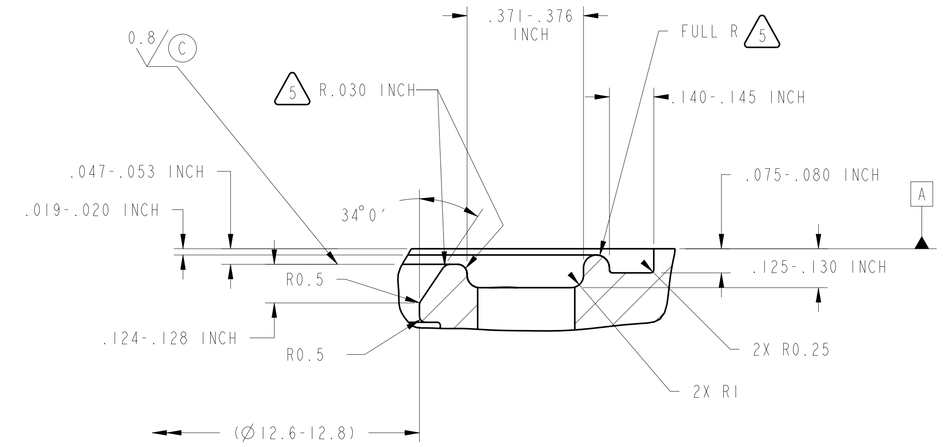

DETAIL B
SCALE 4:1

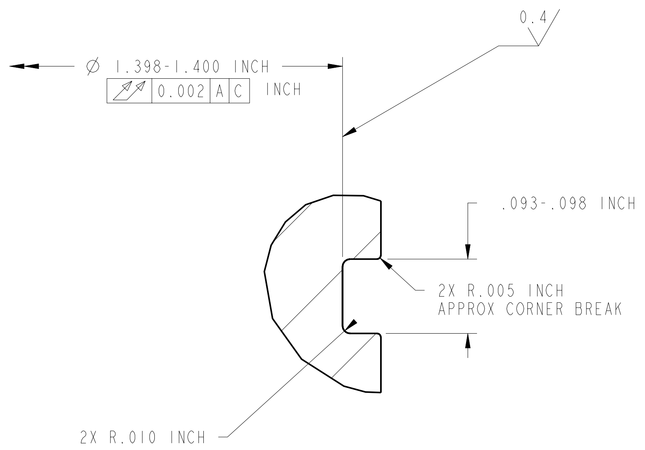

DETAIL D
SCALE 10:1

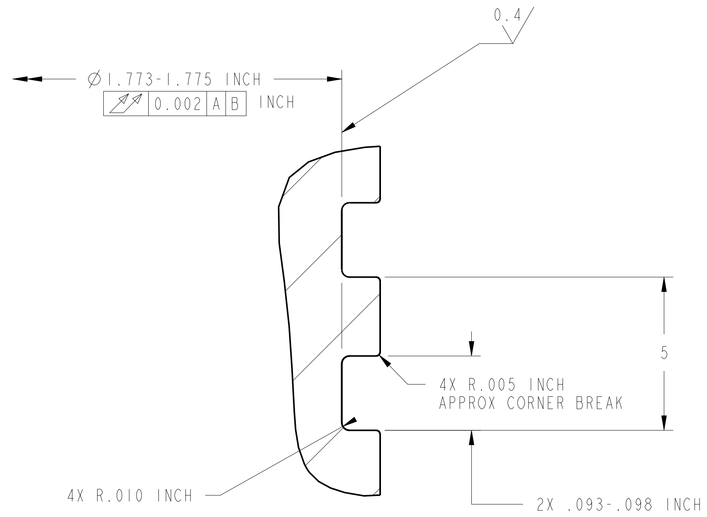

DETAIL C
SCALE 10:1

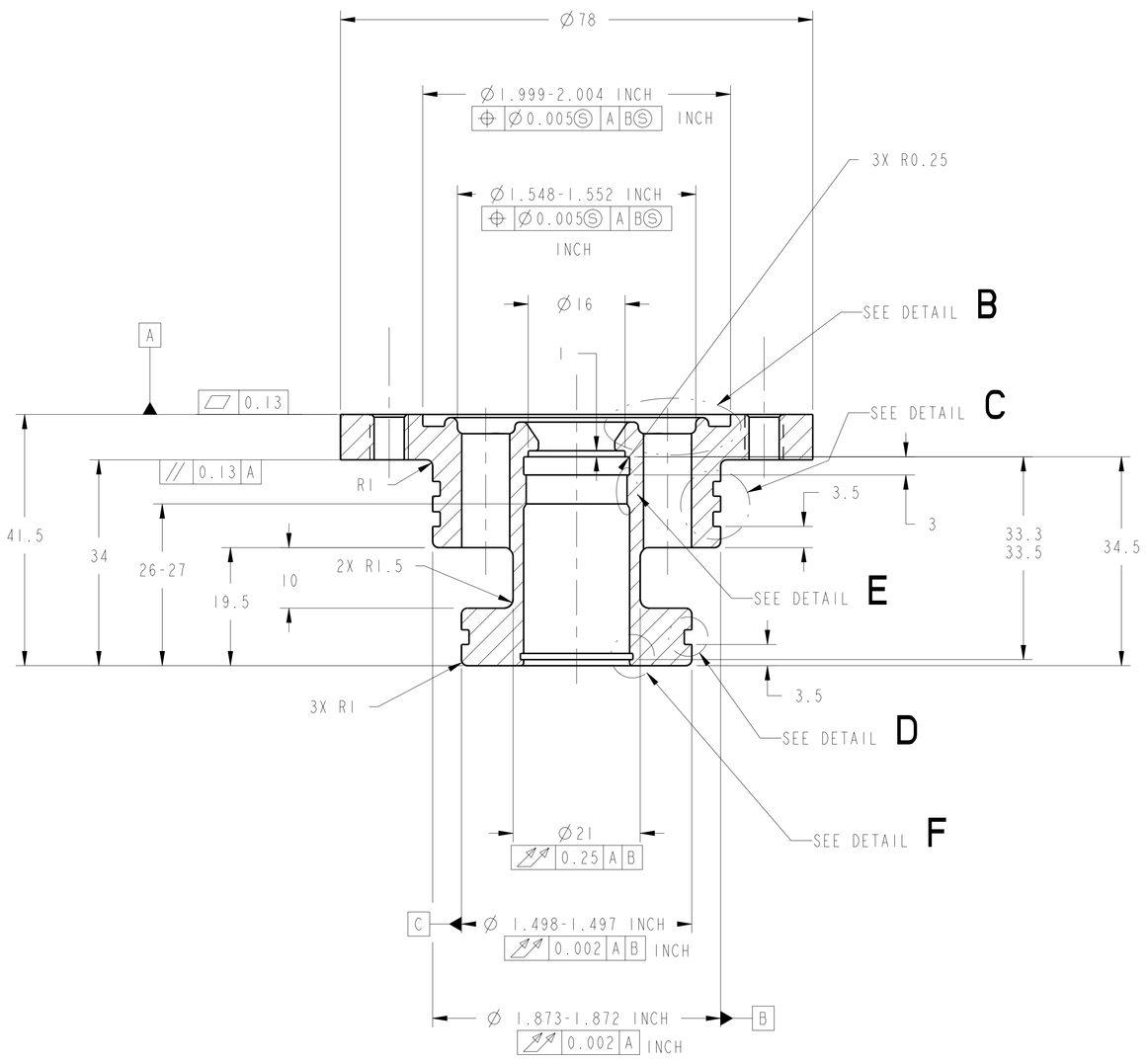

SECTION A-A

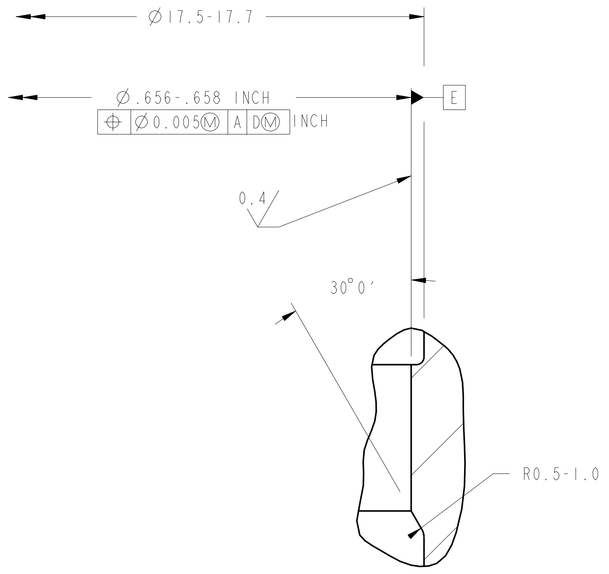

DETAIL E
SCALE 10:1

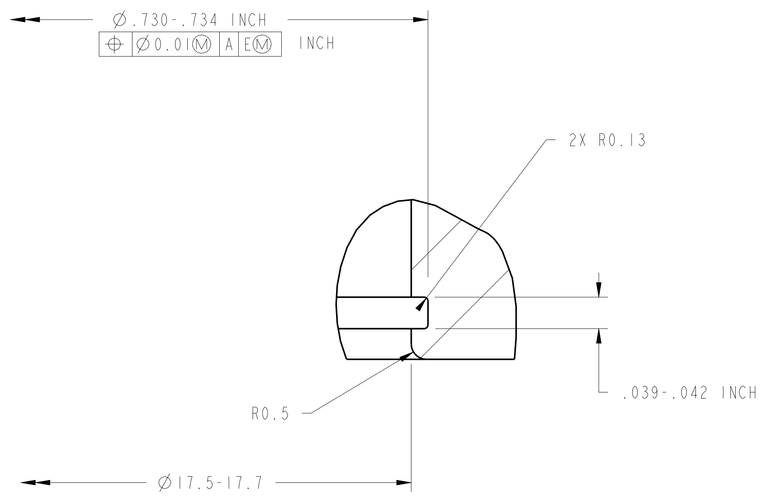

DETAIL F
SCALE 10:1

1. MATERIAL:
   TYPE 316 STAINLESS STEEL PER FEDERAL SPEC QQ-S-763.
2. CERTIFICATE OF CONFORMANCE REQUIRED FOR MATERIALS.
3. ULTRASONIC INSPECT PER MIL-STD-2154, PRIOR TO FABRICATION. ACCEPTANCE PER SECTION 5.5.4., TABLE VI, CLASS LEVEL A.
4. 0.8 Ra ALL MACHINED SURFACES PER ANSI/ASME B46.1.
5. ALL FILLETS NOTED MUST BLEND WITH ADJOINING SURFACES WITH NO UNDERCUTS, AND MUST BE POLISHED SMOOTH WITH NO VISIBLE TOOL MARKS.
6. FINISHED PART MUST PASS DYE PENETRANT INSPECTION PER ASTM E1417. ACCEPTANCE PER MIL-STD-1907.
7. IDENTIFY BY TAGGING WITH DRAWING PART NUMBER 67212MEDM521, PER SAE AS478, METHOD 35.
8. CLEAN SURFACES WITH 190 PROOF ETHYL ALCOHOL. WIPE WITH CLEAN COTTON SWABS AND/OR LINT-FREE CLOTH.
9. HANDLE WITH CLEAN LINT-FREE GLOVES.
10. BEFORE STORAGE, PROTECT WITH CONTAMINATION BARRIER. USE CLEAN, NEW, TRANSPARENT, POLYETHYLENE BAG SEALED WITH FIBERGLASS PACKAGING TAPE. SEAL AND MARK WITH IDENTIFICATION NUMBER ON TAG ATTACHED TO BAG.
11. PROCESS PLAN REQUIRED.
12. ESTIMATED WEIGHT = 0.407 Kg.

CHG	ZONE	DESCRIPTION	APP/DATE

REVISIONS

UNLESS OTHERWISE SPECIFIED:
1. ALL DIMENSIONING AND TOLLERANCING PER ASME Y14.5M-1994
2. ALL DIMENSIONS ARE IN MILLIMETERS
3. BREAK EDGES: 0.2-0.5
4. LINEAR TOLERANCES:
   0.5-6 ±0.1
   OVER 6-30 ±0.2
   OVER 30-120 ±0.3
   OVER 120-315 ±0.5
   OVER 315-1000 ±0.8
   OVER 1000-2000 ±1.2
5. ANGULAR TOLERANCES: 0° 30′

METRIC

THIRD ANGLE PROJECTION

DRAFTER	ADF/D. ROBINSON
DESIGNER	ADF/D. ROBINSON
ENGINEER	ANLX/I. DRALYUK
MODEL NAME:	67212MEDM521
PRO/E VERSION:	19.0
RELEASE DATE:	06/22/99

NATIONAL AERONAUTICS AND SPACE ADMINISTRATION
LEWIS RESEARCH CENTER
CLEVELAND, OHIO

521 1/2 INCH INLET VALVE BODY

1/2 INCH INLET SOLENOID VALVE ASSEMBLIES
67212MEDM520 & 525

SIZE	DRAWING NUMBER	REV	STAT	BLDG/CELL
A0	67212MEDM521	-	R	333/-

SCALE: 2:1 AND NOTED

SHEET 1 OF 1

DRAWING NUMBER 67212MEDM521

REV - STAT R

NAME:ERDEM OBJECT:67212MEDM521 DATE:30-Oct-08 13:14:42