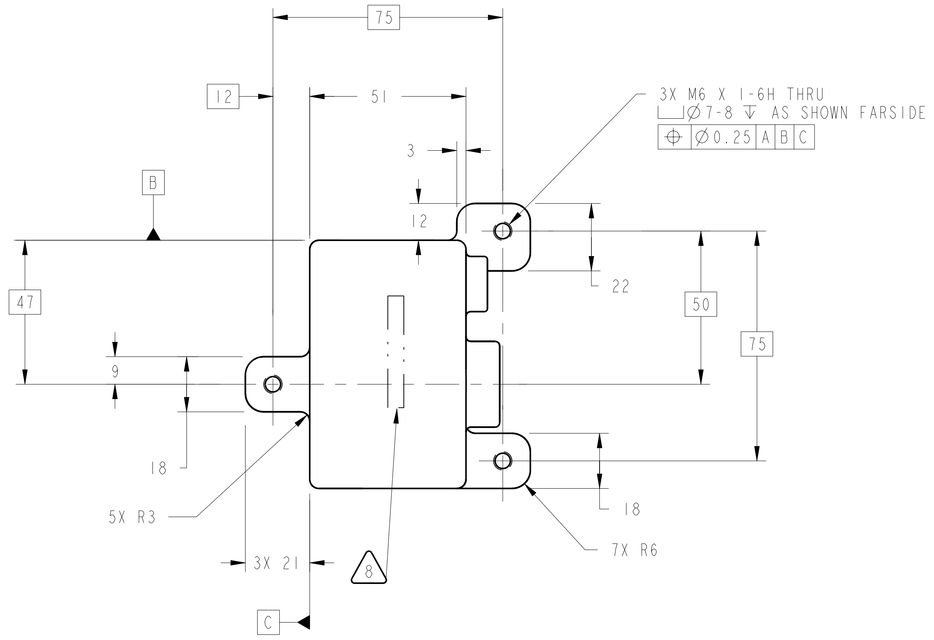

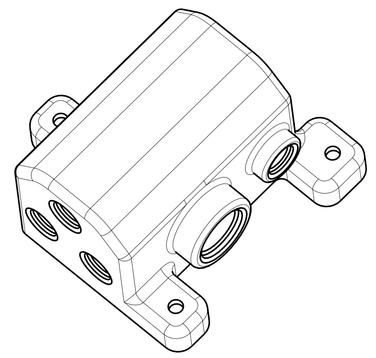

ISO

(TANGENT EDGE LINES SHOWN FOR CLARITY)

1. MATERIAL:
   TYPE 316 SERIES STAINLESS STEEL PER FEDERAL SPEC QQ-S-766, CONDITON A.
2. CERTIFICATE OF CONFORMANCE REQUIRED FOR MATERIAL.
3. ULTRASONIC INSPECT PER MIL-STD-2154, PRIOR TO FABRICATION. ACCEPTANCE PER SECTION 5.5.4., TABLE VI, CLASS LEVEL A.
4. 1.6 Ra ALL MACHINED SURFACES, UNLESS OTHERWISE NOTED, PER ANSI/ASME B46.1.
5. R3 ALL EXTERNAL CORNERS UNLESS OTHERWISE NOTED.
6. BREAK ALL INTERNAL PORT EDGES R0.1-0.2.
7. FINISHED PART MUST PASS DYE PENETRANT INSPECTION PER ASTM E1417. ACCEPTANCE PER MIL-STD-1907.
8. ELECTROCHEMICAL ETCH DRAWING PART NUMBER 67212MEDM501 ON SPECIFIED SURFACE PER SAE AS478, METHOD 7A (ZONE G9).
9. CLEAN AND PASSIVATE PER MIL-S-5002, PARAGRAPHS 3.4.2.4 AND 3.4.2.4.1 AND FEDERAL SPECIFICATION QQ-P-35.
10. CLEAN SURFACES WITH 190 PROOF ETHYL ALCOHOL. WIPE WITH CLEAN COTTON SWABS AND/OR LINT-FREE CLOTH.
11. BEFORE STORAGE, PROTECT WITH CONTAMINATION BARRIER. USE CLEAN, NEW, TRANSPARENT, POLYETHYLENE BAG. SEAL WITH FIBERGLASS PACKAGING TAPE. SEAL AND MARK WITH IDENTIFICATION NUMBER ON TAG ATTACHED TO BAG.
12. PROCESS PLAN REQUIRED.
13. ESTIMATED WEIGHT = 1.359 Kg.

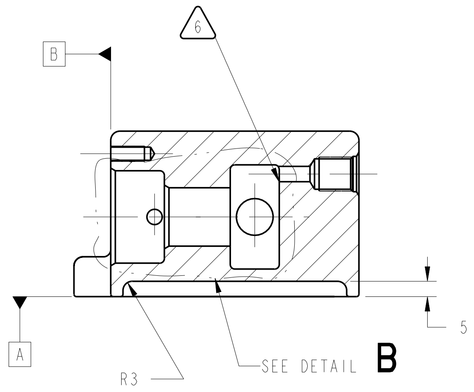

SECTION A-A

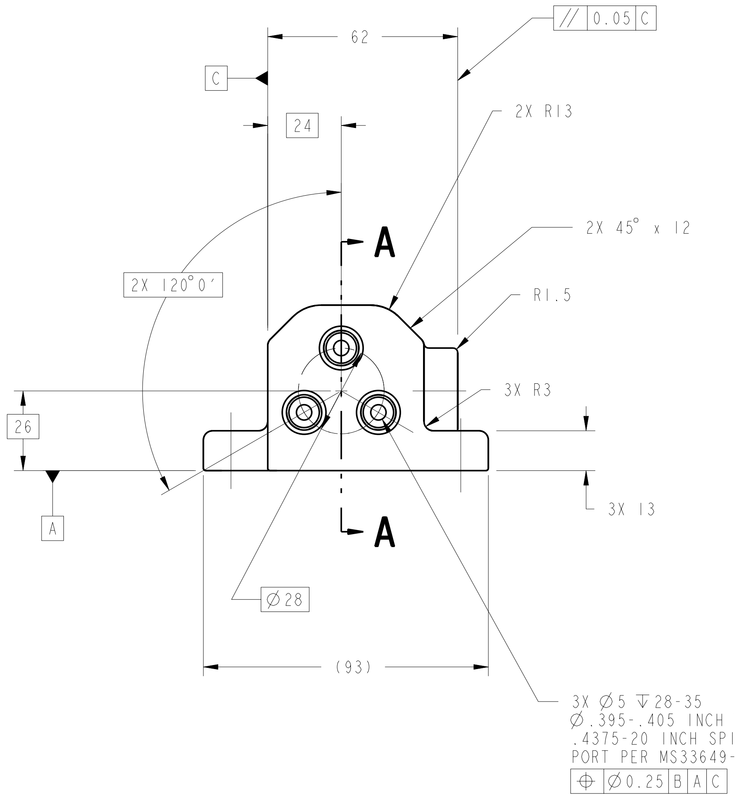

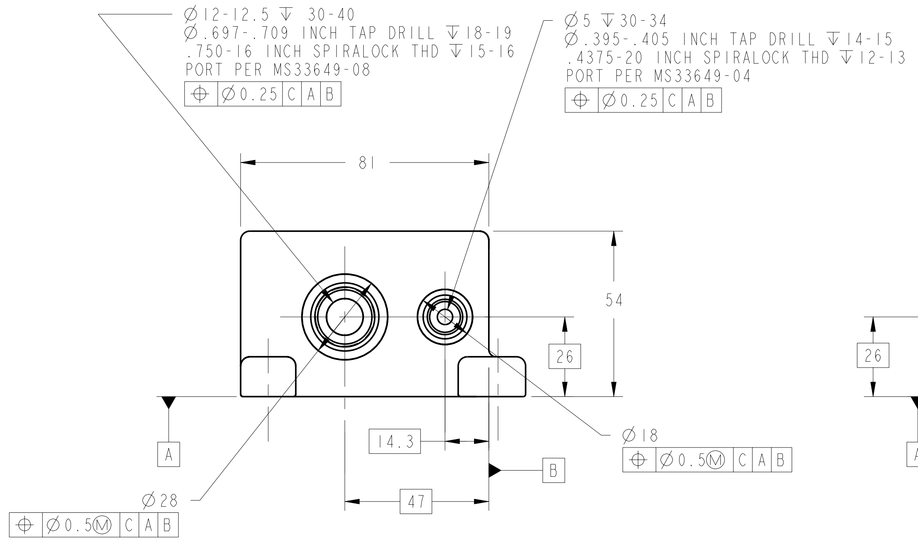

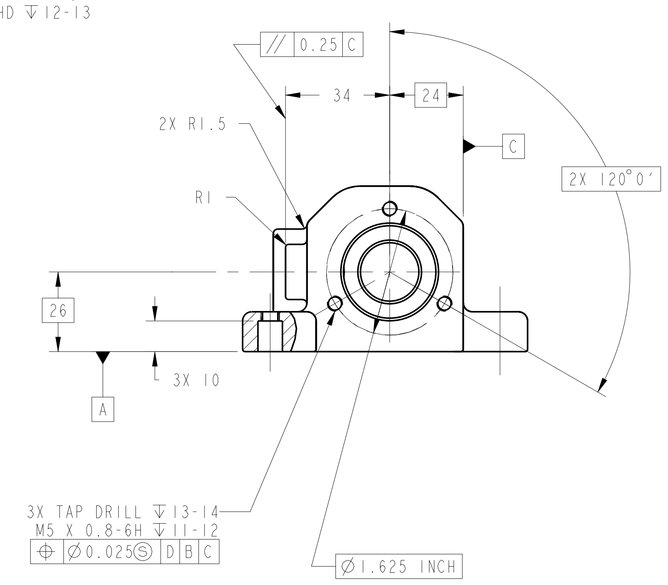

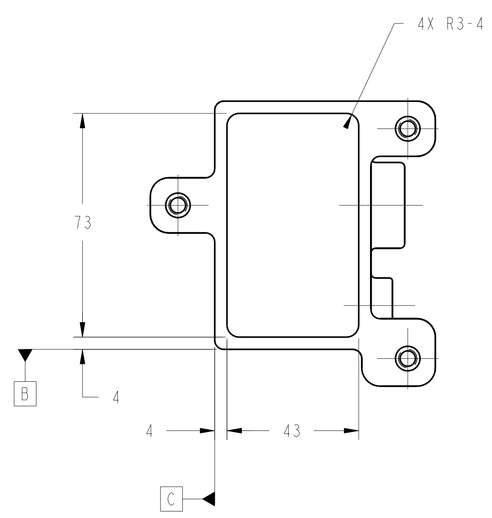

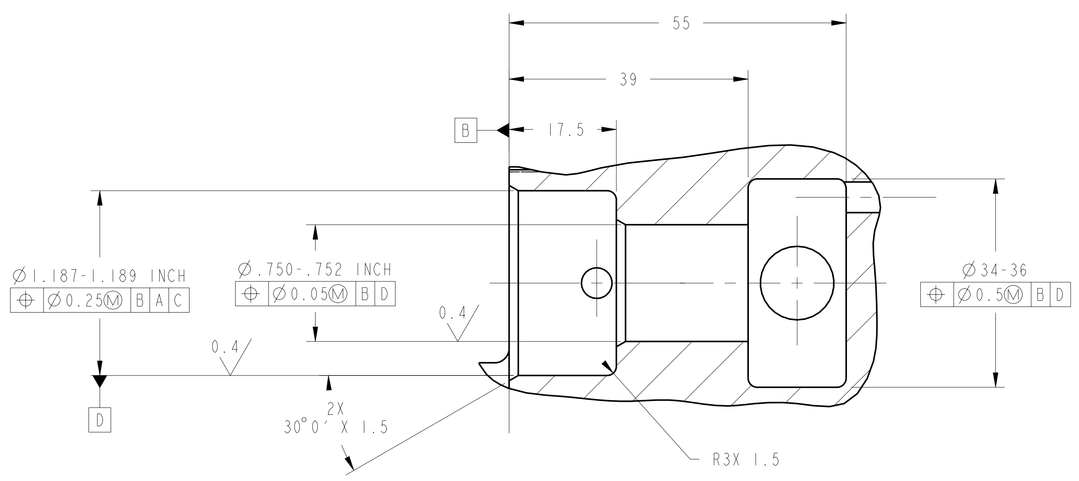

DETAIL B
SCALE 2:1

CHG	ZONE	DESCRIPTION	APP/DATE
B	F/D	CHANGED PORT LCTN, MTG HOLES & ADDED CUTOUT	D.ROBINSON 05/28/99
A	E/F1	ADDED INSPECTION NOTES: ULTRASONIC & DYE PEN. NOTE 1 WAS PER QQ-S-763	D.ROBINSON 05/18/99

REVISIONS

UNLESS OTHERWISE SPECIFIED:
1. ALL DIMENSIONING AND TOLLERANCING PER ASME Y14.5M-1994
2. ALL DIMENSIONS ARE IN MILLIMETERS
3. BREAK EDGES: 0.2-0.5
4. LINEAR TOLERANCES:
   0.5-6 ±0.1
   OVER 6-30 ±0.2
   OVER 30-120 ±0.3
   OVER 120-315 ±0.5
   OVER 315-1000 ±0.8
   OVER 1000-2000 ±1.2
5. ANGULAR TOLERANCES: 0° 30'

METRIC

THIRD ANGLE PROJECTION

DRAFTER	ADF/M.AYNIK
DESIGNER	ADF/D.ROBINSON
ENGINEER	ANLX/D.CATALANO
MODEL NAME:	67212MEDM501
PRO/E VERSION:	19.0
RELEASE DATE:	05/14/99

NATIONAL AERONAUTICS AND SPACE ADMINISTRATION
LEWIS RESEARCH CENTER
CLEVELAND, OHIO

501 STATIC MIXER MANIFOLD BLOCK

STATIC MIXER MANIFOLD ASSEMBLY
67212MELM500

SIZE	DRAWING NUMBER	REV	STAT	BLDG/CELL
A0	67212MEDM501	B	R	333/-

SCALE: 1:1 SHEET 1 OF 1

DRAWING NUMBER 67212MEDM501

REV B STAT R

NAME:EDAN OBJECT:67212MEDM501 DATE:20-Oct-00 13:13:07