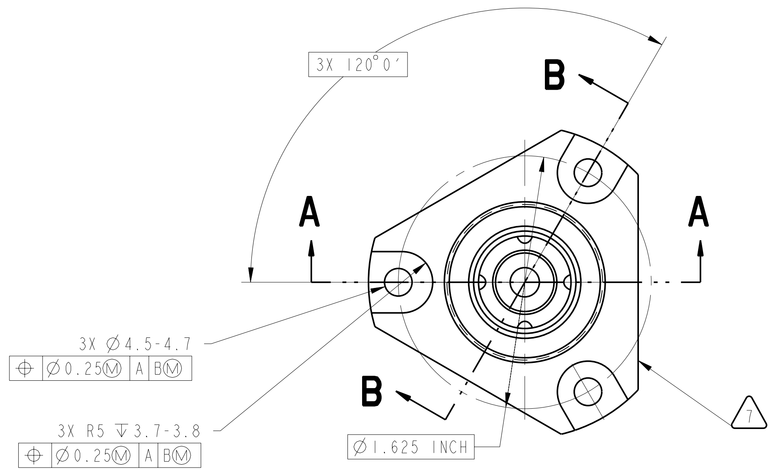

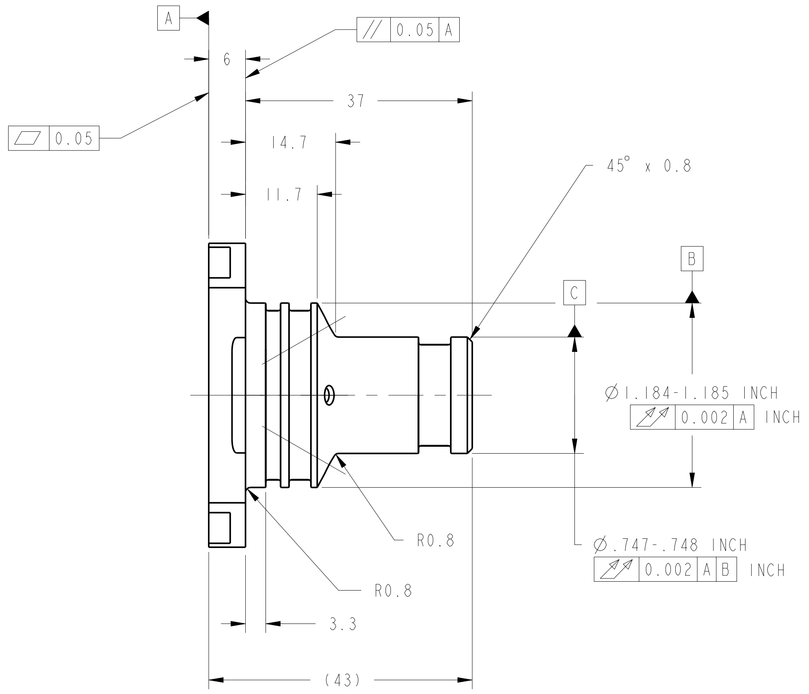

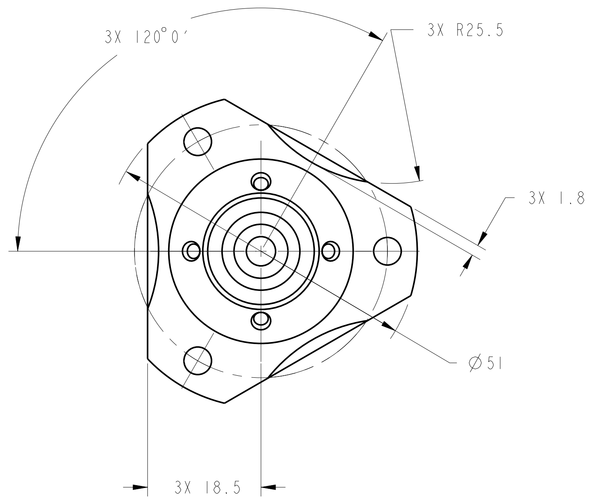

1. MATERIAL:
   TYPE 316 STAINLESS STEEL PER FEDERAL SPEC QQ-S-766.
2. CERTIFICATE OF CONFORMANCE REQUIRED FOR MATERIALS.
3. ULTRASONIC INSPECT PER MIL-STD-2154, PRIOR TO FABRICATION. ACCEPTANCE PER SECTION 5.5.4., TABLE VI, CLASS LEVEL A.
4. 1.6 Ra ALL OVER UNLESS OTHERWISE NOTED PER ANSI/ASME B46.1.
5. ALL INTERNAL PORTS MUST BE BLENDED SMOOTH WITH NO FEATHERED EDGES OR BURRS.
6. FINISHED PART MUST PASS DYE PENETRANT INSPECTION PER ASTM E1417. ACCEPTANCE PER MIL-STD-1907.
7. ELECTROCHEMICAL ETCH DRAWING PART NUMBER 67212MEDM336 ON SPECIFIED SURFACE PER SAE AS478, METHOD 7A (ZONE F9).
8. CLEAN AND PASSIVATE PER MIL-S-5002, PARAGRAPHS 3..4.2.4 AND 3.4.2.4.1. AND QQ-P-35.
9. CLEAN SURFACES WITH 190 PROOF ETHYL ALCOHOL. WIPE WITH CLEAN COTTON SWABS AND/OR LINT-FREE CLOTH.
10. HANDLE WITH CLEAN, LINT-FREE GLOVES.
11. BEFORE STORAGE, PROTECT WITH CONTAMINATION BARRIER. USE CLEAN, NEW, TRANSPARENT, POLYETHYLENE BAG SEALED WITH FIBERGLASS PACKAGING TAPE. SEAL AND MARK WITH IDENTIFICATION NUMBER ON TAG ATTACHED TO BAG.
12. PROCESS PLAN REQUIRED.
13. ESTIMATED WEIGHT =0.120 Kg.

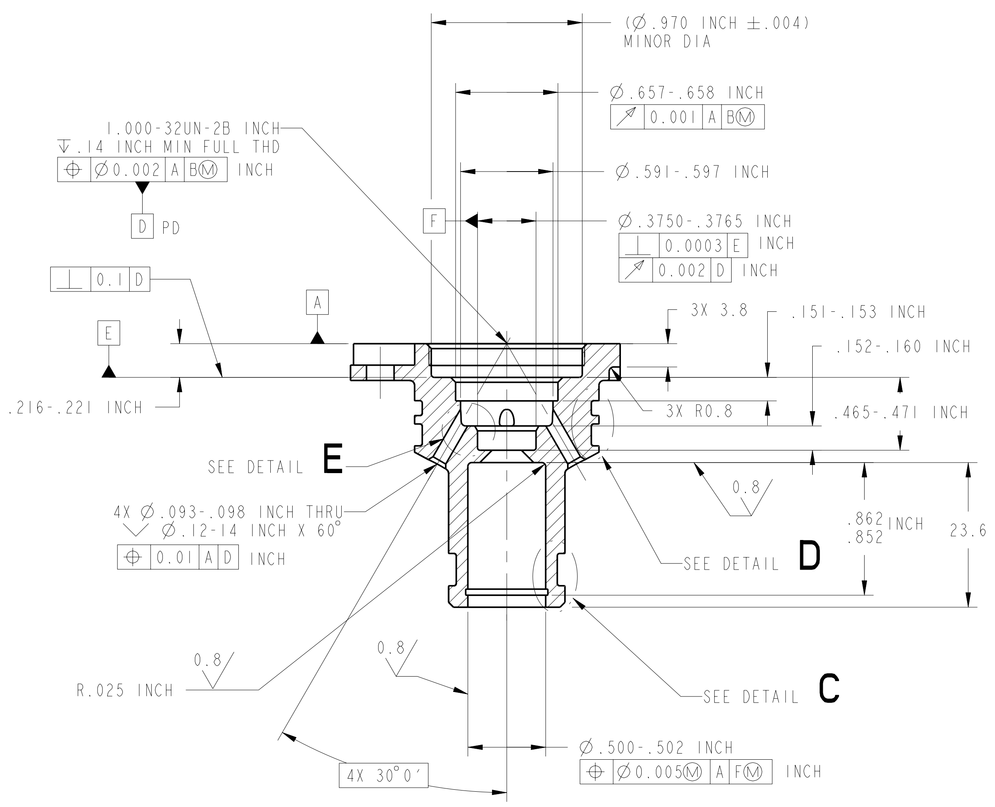

SECTION A-A

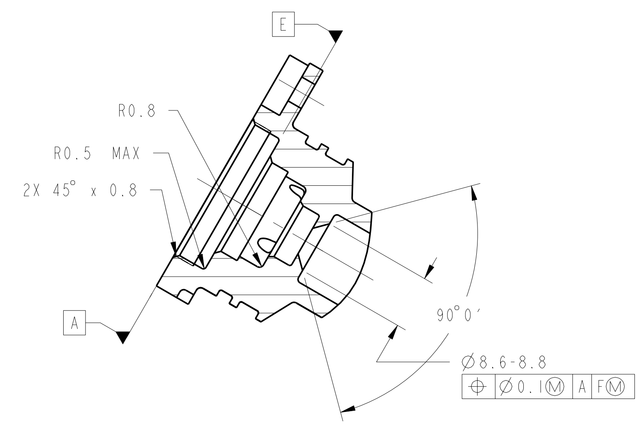

SECTION B-B

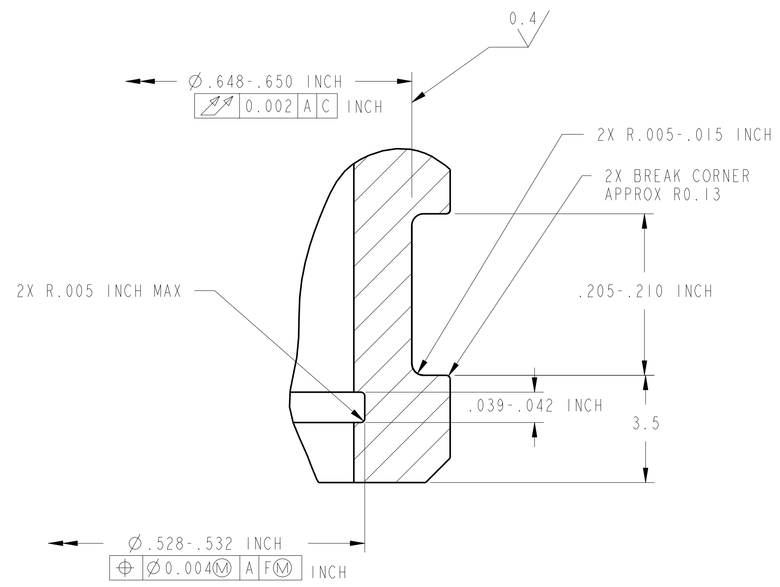

DETAIL C
SCALE 10:1

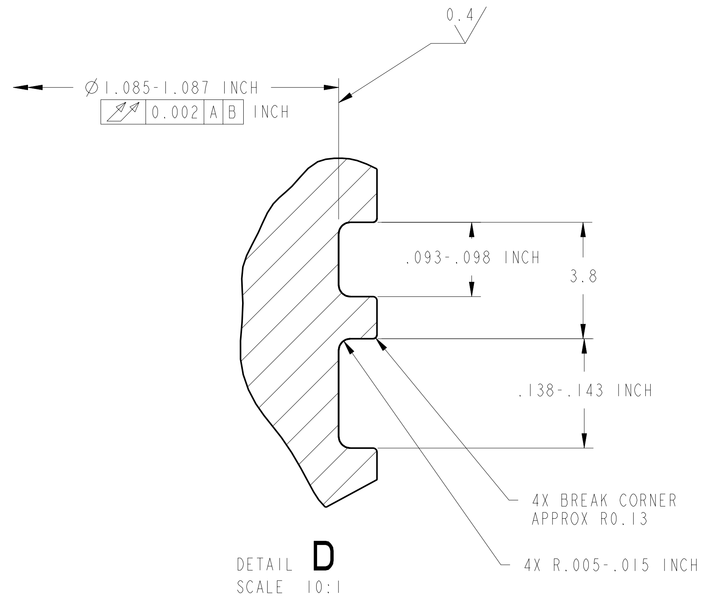

DETAIL D
SCALE 10:1

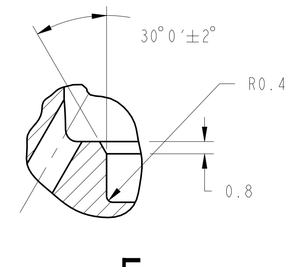

DETAIL E
SCALE 5:1

CHG	ZONE	DESCRIPTION	APP/DATE
B	D6 F/D	GTOL WAS Ø0.01Ⓜ CORRECTED TOL DISPLAY	D.ROBINSON 08/17/99
A	G8/9 C11 D6/7 F/D	DELETED Ø.107-.110 INCH DELETED DIM 45° X 1 ADDED DIM Ø8.6-8.8 & 90° UPDATED DWG FORMAT	D.ROBINSON 08/05/99

REVISIONS

UNLESS OTHERWISE SPECIFIED:
1. ALL DIMENSIONING AND TOLERANCING PER ASME Y14.5M-1994
2. ALL DIMENSIONS ARE IN MILLIMETERS
3. BREAK EDGES: 0.2-0.5
4. LINEAR TOLERANCES:
   0.5-6 ±0.1
   OVER 6-30 ±0.2
   OVER 30-120 ±0.3
   OVER 120-315 ±0.5
   OVER 315-1000 ±0.8
   OVER 1000-2000 ±1.2
5. ANGULAR TOLERANCES: 0° 30'

CONTRACT	NAS3-27600
CONTRACTOR	ADF, INC.
TASK ORDER	060
DRAFTER	ADF/W. HOLT
ENGINEER	ANLX/I. DRALYUK
DESIGNER	ADF/D. ROBINSON

THIRD ANGLE PROJECTION

NATIONAL AERONAUTICS AND SPACE ADMINISTRATION
JOHN H. GLENN RESEARCH CENTER
LEWIS FIELD
CLEVELAND, OHIO

1/4" HIGH PRESSURE INLET VALVE ASSEMBLY-LONG
67212MEDM460

461 1/4" HIGH PRESSURE INLET VALVE BODY-LONG

PDM REL LEVEL: RELEASE PDM REVISION: -.3
PDM DATABASE: FCF
MODEL NAME: 67212MEDM461
PRIOR TO USE VERIFY THE INTENDED PURPOSE IN PDM ("FOR" ATTRIBUTE)

SIZE	DRAWING NUMBER	REV	BLDG	AREA
A0	67212MEDM461	B	333	-
			UNITS: mm	
SCALE: 2:1 AND NOTED	INITIAL REL DATE 06/08/99	SHEET 1 OF 1	DISCIPLINE MECHANICAL	

PRO/E VERSION: 19.0

REV B
67212MEDM461
SIZE A0

NAME:FDRCN OBJECT:67212MEDM461 DATE:30-OCT-00 13:12:38