1. MATERIAL:
   TYPE 316 STAINLESS STEEL PER QQ-S-766.
2. CERTIFICATE OF CONFORMANCE REQUIRED FOR MATERIALS.
3. ULTRASONIC INSPECT PER MIL-STD-2154, PRIOR TO FABRICATION. ACCEPTANCE PER SECTION5.5.4., TABLE VI, CLASS LEVEL A.
4. 1.6 Ra ALL OVER UNLESS OTHERWISE NOTED.
5. ALL INTERNAL PORTS MUST BE BLENDED SMOOTH WITH NO FEATHERED EDGES OR BURRS.
6. FINISHED PART MUST PASS DYE PENETRANT INSPECTION PER ASTM E1417. ACCEPTANCE PER MIL-STD-1907.
7. ELECTROCHEMICAL ETCH DRAWING PART NUMBER 67212MEDM456 ON SPECIFIED SURFACE PER SAE AS478, METHOD 7A (ZONE F10).
8. CLEAN AND PASSIVATE PER MIL-S-5002, PARAGRAPHS 3.4.2.4 AND 3.4.2.4.1, AND QQ-P-35.
9. CLEAN SURFACES WITH 190 PROOF ETHYL ALCOHOL. WIPE WITH CLEAN COTTON SWABS AND/OR LINT -FREE CLOTH.
10. QUANTITY: ONE REQUIRED.

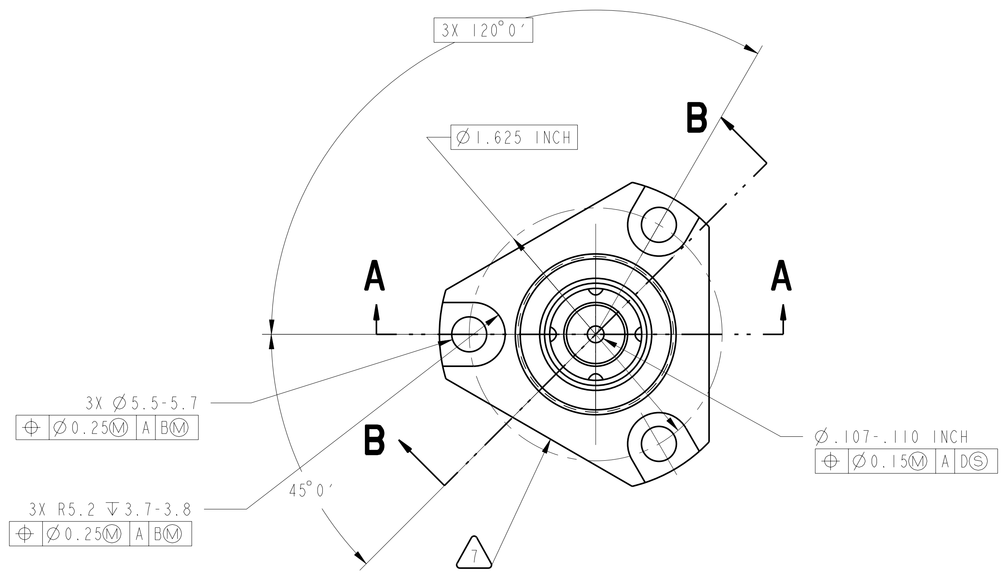

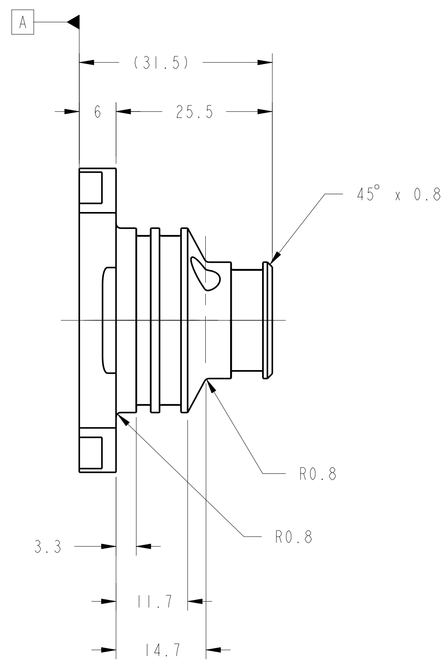

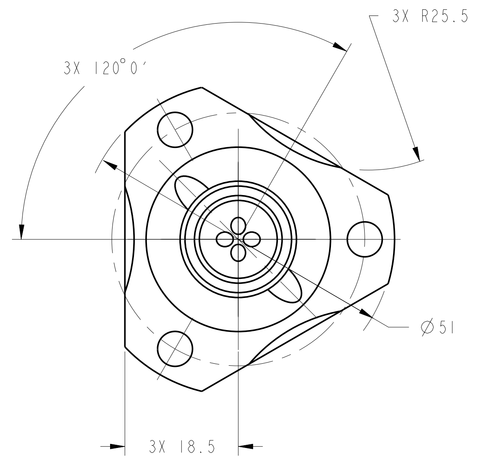

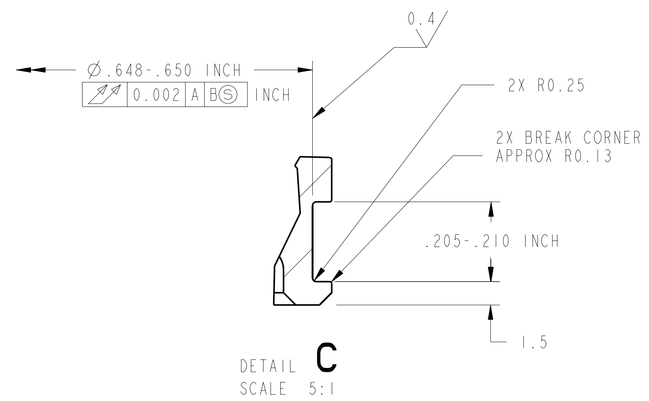

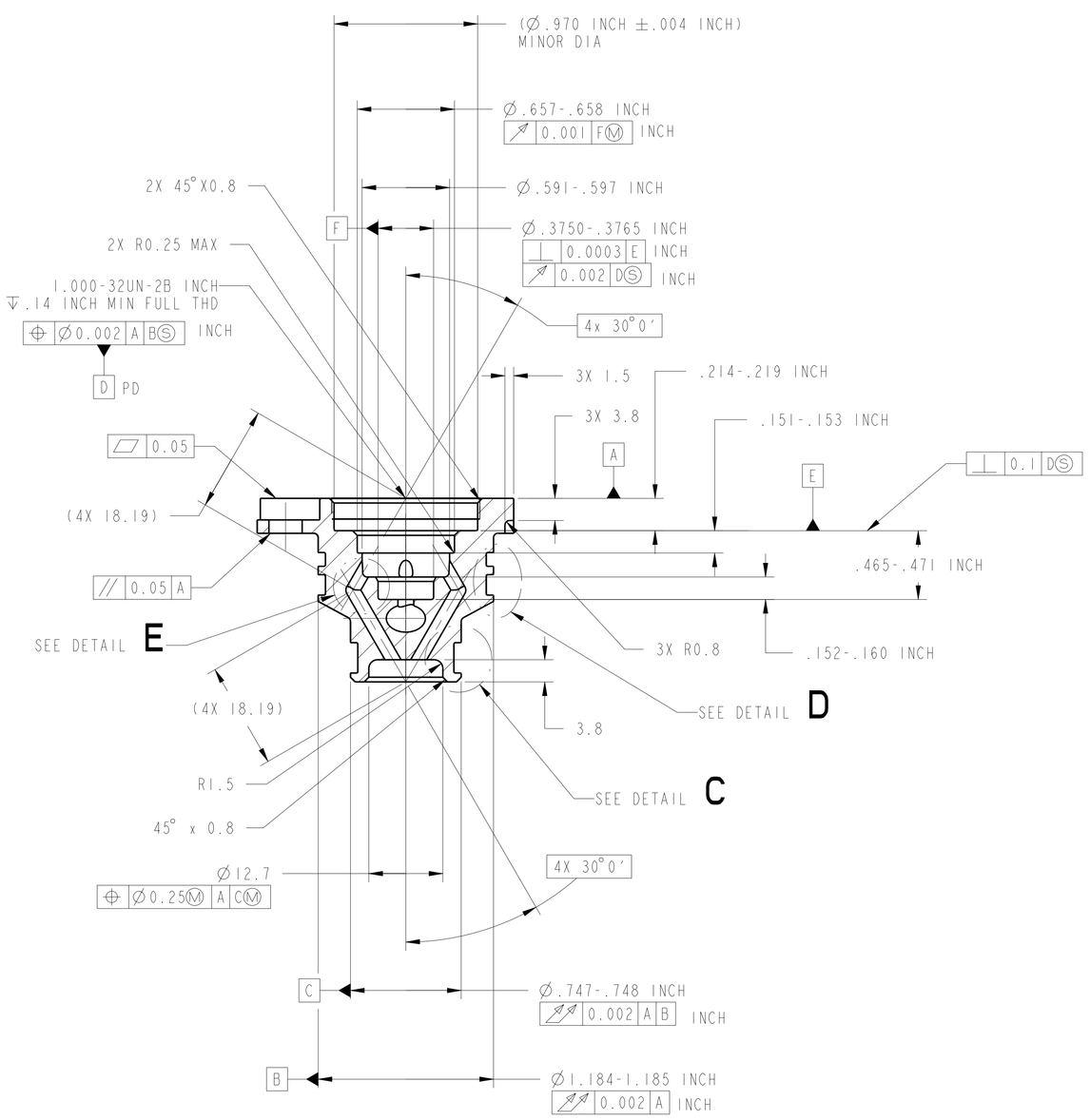

SECTION A-A

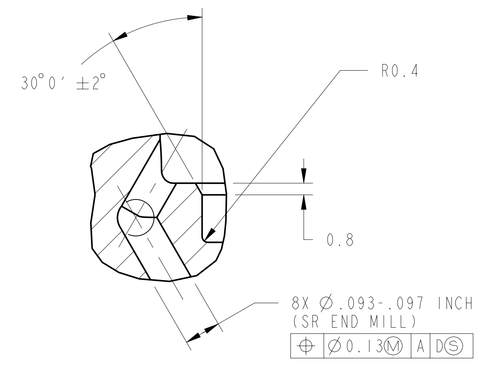

DETAIL E
SCALE 5:1

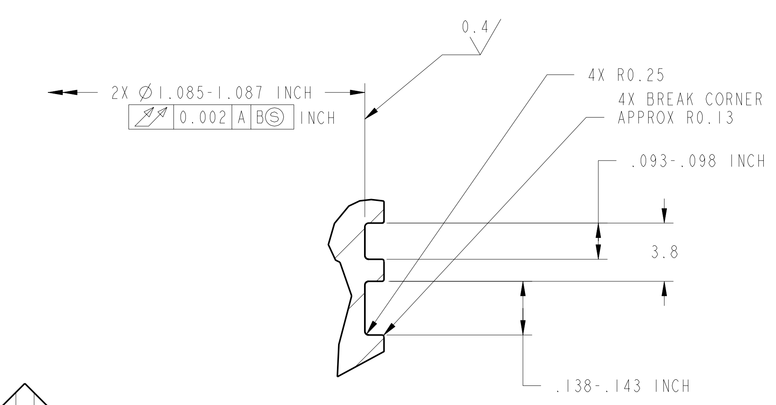

DETAIL D
SCALE 5:1

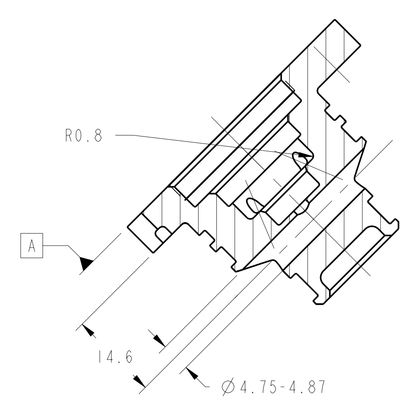

SECTION B-B

CHG	ZONE	DESCRIPTION	APP/DATE

REVISIONS

UNLESS OTHERWISE SPECIFIED:
1. ALL DIMENSIONING AND TOLLERANCING PER ASME Y14.5M-1994
2. ALL DIMENSIONS ARE IN MILLIMETERS
3. BREAK EDGES: 0.2-0.5
4. LINEAR TOLERANCES:
   0.5-6 ±0.1
   OVER 6-30 ±0.2
   OVER 30- 120 ±0.3
   OVER 120-315 ±0.5
   OVER 315-1000 ±0.8
   OVER 1000-2000 ±1.2
5. ANGULAR TOLERANCES: 0° 30′

METRIC

THIRD ANGLE PROJECTION

DRAFTER	W. HOLT
DESIGNER	D. ROBINSON
ENGINEER	D. CATALANO
MODEL NAME:	67212MEDM456
PRO/E VERSION:	18.0
RELEASE DATE:	05/05/98

NATIONAL AERONAUTICS AND SPACE ADMINISTRATION
LEWIS RESEARCH CENTER
CLEVELAND, OHIO

456 HIGH PRESSURE OUTLET VALVE BODY

HIGH PRESSURE OUTLET VALVE BODY ASSEMBLY

67212MEDM455

SIZE	DRAWING NUMBER	REV	STAT	BLDG/CELL
A0	67212MEDM456	-	-	333/ -

SCALE: 2:1 AND NOTED | SHEET 1 OF 1

CHECKPRINT

DRAWING NUMBER 67212MEDM456

REV - STAT -

NAME:FDGER DATE:30-Oct-00 11:54:44