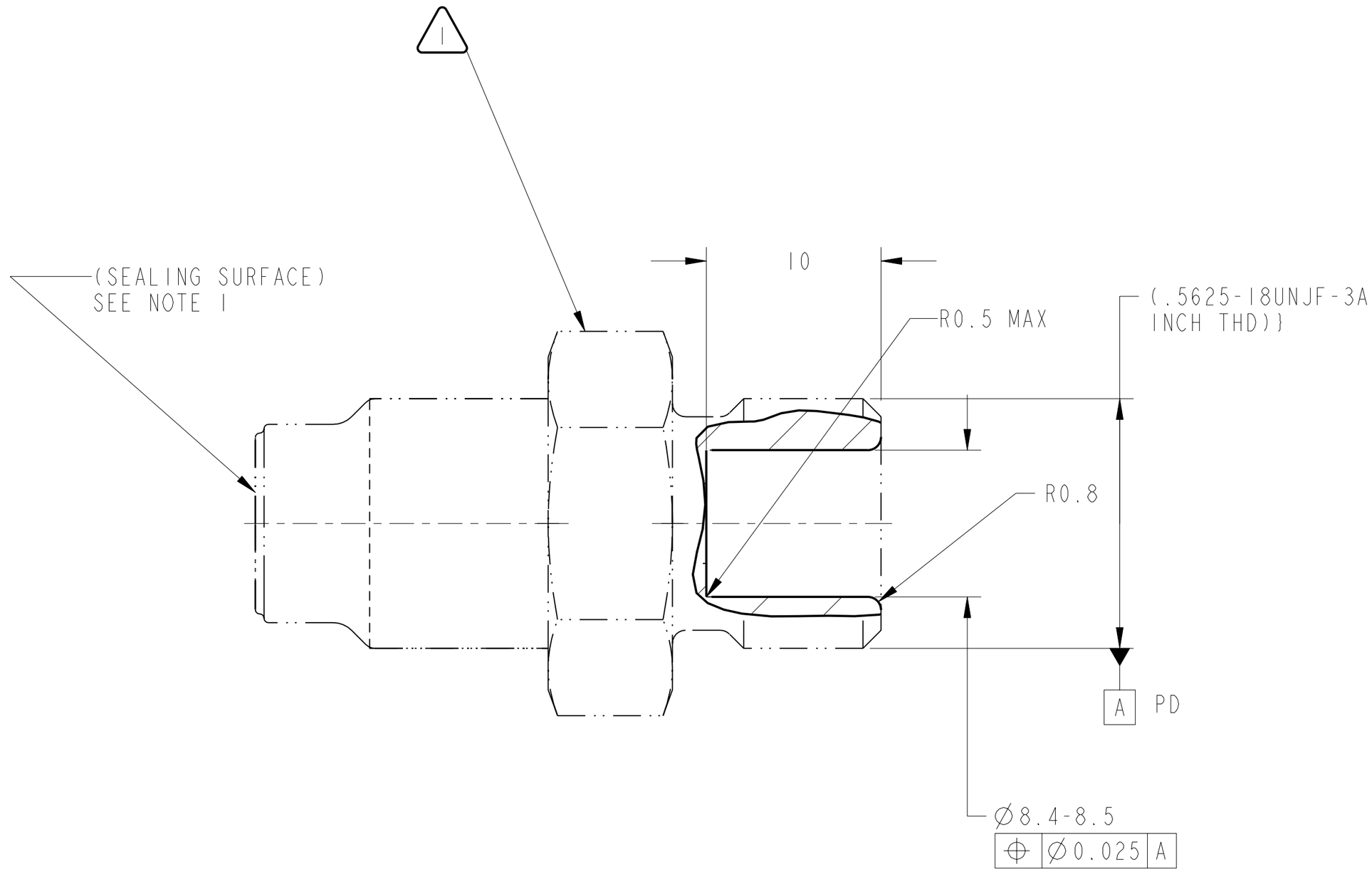

1. SWAGELOCK STRAIGHT THREAD MALE CONNECTOR NUMBER SS-4-VCR-1-00032. MODIFY AS SHOWN USING CAUTION TO PROTECT ALL EXTERNAL SEALING SURFACES FROM ANY DAMAGE.

2. 0.8 Ra ALL MACHINED SURFACES PER ANSI/ASME B46.1.

3. CLEAN SURFACES WITH 190 PROOF ETHYL ALCOHOL. WIPE WITH CLEAN COTTON SWABS AND/OR LINT-FREE CLOTH.

4. IDENTIFY BY TAGGING WITH DRAWING PART NUMBER 67212MEDM453, PER SAE AS478, METHOD 35.

5. HANDLE WITH CLEAN, LINT-FREE GLOVES.

6. BEFORE STORAGE, PROTECT WITH CONTAMINATION BARRIER. USE CLEAN, NEW, TRANSPARENT, POLYETHYLENE BAG SEALED WITH FIBERGLASS PACKAGING TAPE. SEAL AND MARK WITH IDENTIFICATION NUMBER ON TAG ATTACHED TO BAG.

7. QUANTITY: ONE REQUIRED.

CHG	ZONE	DESCRIPTION	APP/DATE
A	D1	NOTE 1 WAS... NUMBER SS-4-VCR-00032	DAR 06/09/98

REVISIONS

UNLESS OTHERWISE SPECIFIED:

1. ALL DIMENSIONING AND TOLLERANCING PER ASME Y14.5M-1994
2. ALL DIMENSIONS ARE IN MILLIMETERS
3. BREAK EDGES: 0.2-0.5
4. LINEAR TOLERANCES:
   0.5-6 ±0.1
   OVER 6-30 ±0.2
   OVER 30- 120 ±0.3
   OVER 120-315 ±0.5
   OVER 315-1000 ±0.8
   OVER 1000-2000 ±1.2
5. ANGULAR TOLERANCES: 0° 30′

METRIC

THIRD ANGLE PROJECTION

DRAFTER	D.ROBINSON
DESIGNER	D.ROBINSON
ENGINEER	D.CATALANO
MODEL NAME: 67212MEDM453	
PRO/E VERSION: 18.0	
RELEASE DATE: 06/01/98	

NATIONAL AERONAUTICS AND SPACE ADMINISTRATION
LEWIS RESEARCH CENTER
CLEVELAND, OHIO

453 MODIFIED SWAGELOCK VCR FITTING

NITROGEN/HIGH PRESSURE MANIFOLD ASSEMBLY
67212MELM450

SIZE	DRAWING NUMBER	REV	STAT	BLDG/CELL
A2	67212MEDM453	X	R	333/-

SCALE: 4/1 SHEET 1 OF 1

DRAWING NUMBER 67212MEDM453 REV X STAT R

NAME:EDJEN OBJECT:67212MEDM453 DATE:30-Oct-00 11:53:13