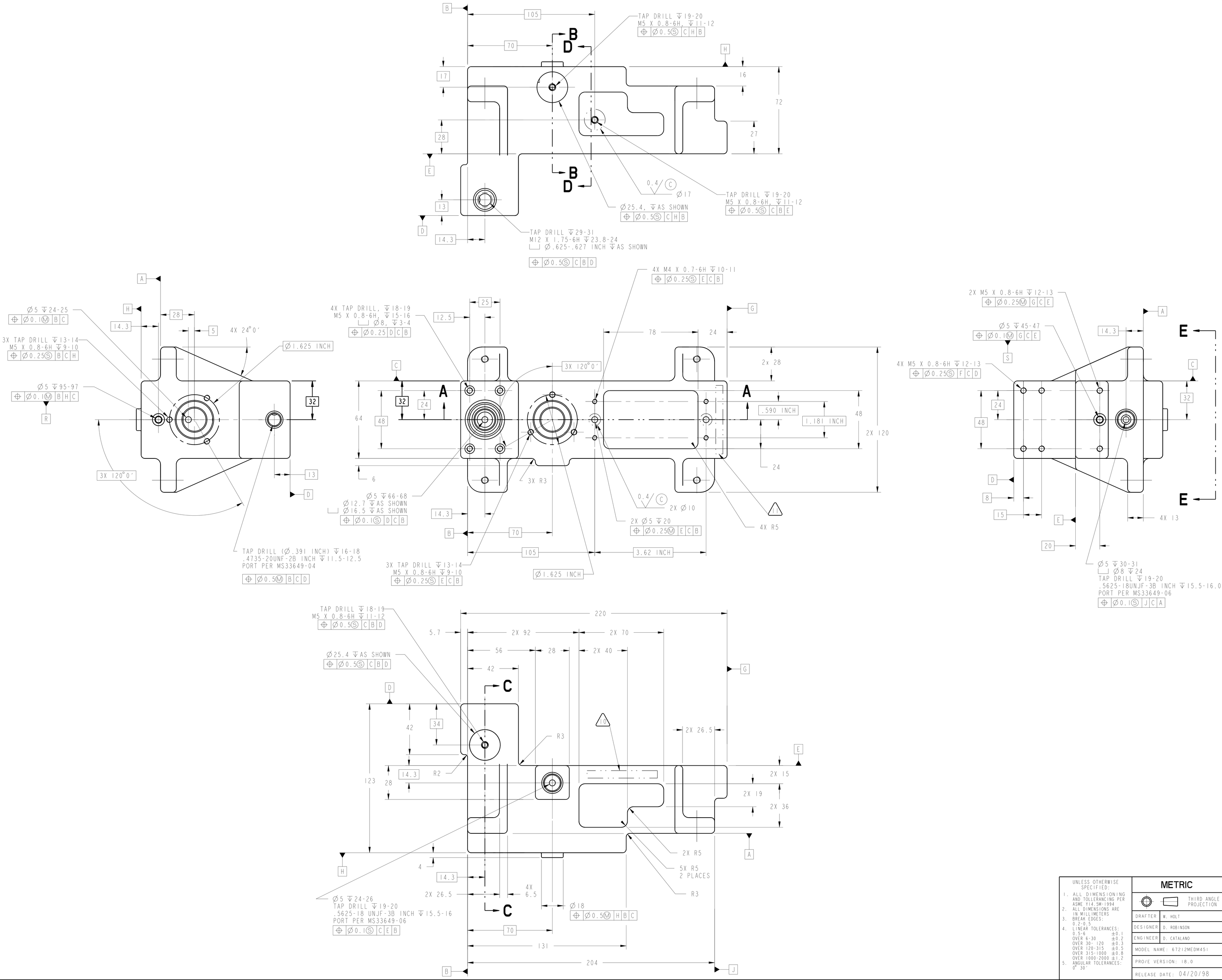

1. FOR ADDITIONAL VIEWS, SECTIONS AND INFORMATION SEE SHEET 02.
2. MATERIAL:TYPE 316 STAINLESS STEEL, PER QQ-S-766.
3. CERTIFICATE OF CONFORMANCE REQUIRED FOR MATERIALS.
4. ULTRASONIC INSPECT PER MIL-STD-2154, PRIOR TO FABRICATION. ACCEPTANCE PER SECTION 5.5.4., TABLE VI, CLASS LEVEL A.
5. 3.2 Ra ALL MACHINED SURFACES UNLESS OTHERWISE NOTED.
6. ALL OUTSIDE CORNERS TO BE R3 UNLESS OTHERWISE SPECIFIED.
7. ALL INSIDE FILLETS TO BE R5 UNLESS OTHERWISE SPECIFIED.
8. ALL INTERNAL PORTS MUST BE BLENDED SMOOTH WITH NO FEATHERED EDGES OR BURRS.
9. FINISHED PART MUST PASS DYE PENETRANT INSPECTION PER ASTM E1417. ACCEPTANCE PER MIL-STD-1907.
10. ELECTROCHEMICAL ETCH DRAWING PART NUMBER 67212MEDM451 ON SPECIFIED SURFACE PER SAE AS478, METHOD 7A (ZONE C7).
11. ELECTROCHEMICAL ETCH "N2/HIGH PRESSURE" ON SPECIFIED SURFACE, PER SAE AS478, METHOD 7A (ZONE D6).
12. CLEAN AND PASSIVATE PER MIL-S-5002, PARAGRAPHS 3.4.2.4 AND 3.4.2.4.1, AND QQ-P-35.
13. CLEAN SURFACES WITH 190 PROOF ETHYL ALCOHOL. WIPE WITH CLEAN LINT FREE CLOTH
14. QUANTITY: ONE REQUIRED.

CHG	ZONE	DESCRIPTION	APP/DATE
B	F9	ADDED TAP DRILL ↧18-19 & ↧15-16 WAS ↧12-13	DAR 06/24/98
A	E8	HOLE LCTN BASIC DIMS 12.5 & 25 WERE 10 & 20	DAR 06/17/98

REVISIONS

UNLESS OTHERWISE SPECIFIED:
1. ALL DIMENSIONING AND TOLLERANCING PER ASME Y14.5M-1994
2. ALL DIMENSIONS ARE IN MILLIMETERS
3. BREAK EDGES: 0.2-0.5
4. LINEAR TOLERANCES:
   0.5-6 ±0.1
   OVER 6-30 ±0.2
   OVER 30-120 ±0.3
   OVER 120-315 ±0.5
   OVER 315-1000 ±0.8
   OVER 1000-2000 ±1.2
5. ANGULAR TOLERANCES: 0° 30′

METRIC

THIRD ANGLE PROJECTION

DRAFTER	W. HOLT
DESIGNER	D. ROBINSON
ENGINEER	D. CATALANO
MODEL NAME: 67212MEDM451	
PRO/E VERSION: 18.0	
RELEASE DATE: 04/20/98	

NATIONAL AERONAUTICS AND SPACE ADMINISTRATION
LEWIS RESEARCH CENTER
CLEVELAND, OHIO

451 NITROGEN/HIGH PRESSURE MANIFOLD

NITROGEN/HIGH PRESSURE MANIFOLD ASSEMBLY
67212MEDM450

CHECKPRINT

SIZE	DRAWING NUMBER	REV	STAT	BLDG/CELL
A0	67212MEDM451	A	-	333/ -

SCALE: 1:1 SHEET 1 OF 2

DRAWING NUMBER 67212MEDM451

NAME:ED:EA MODEL:67212MEDM451.1 DATE:98-04-08 11:52:01

1. FOR ADDITIONAL VIEWS, SECTIONS, AND INFORMATION SEE SHEET 01.

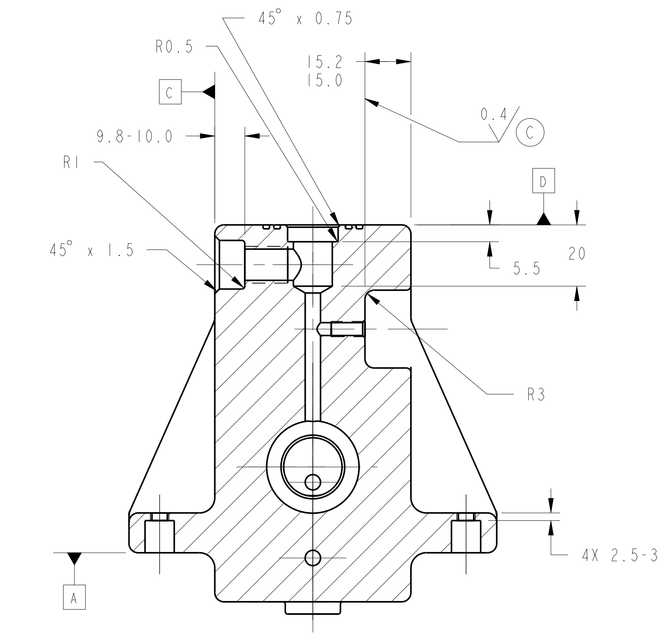

SECTION **C-C**

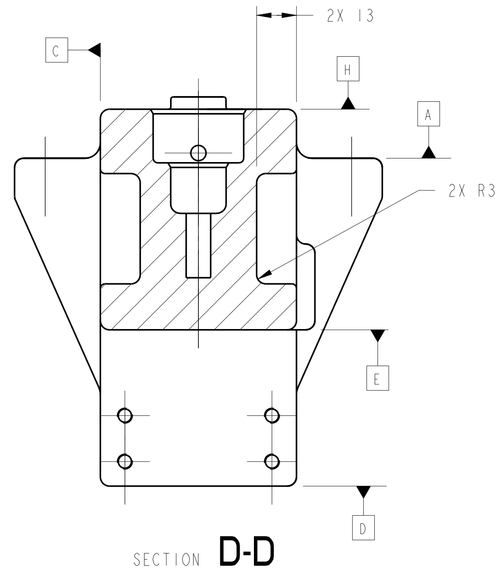

SECTION **D-D**

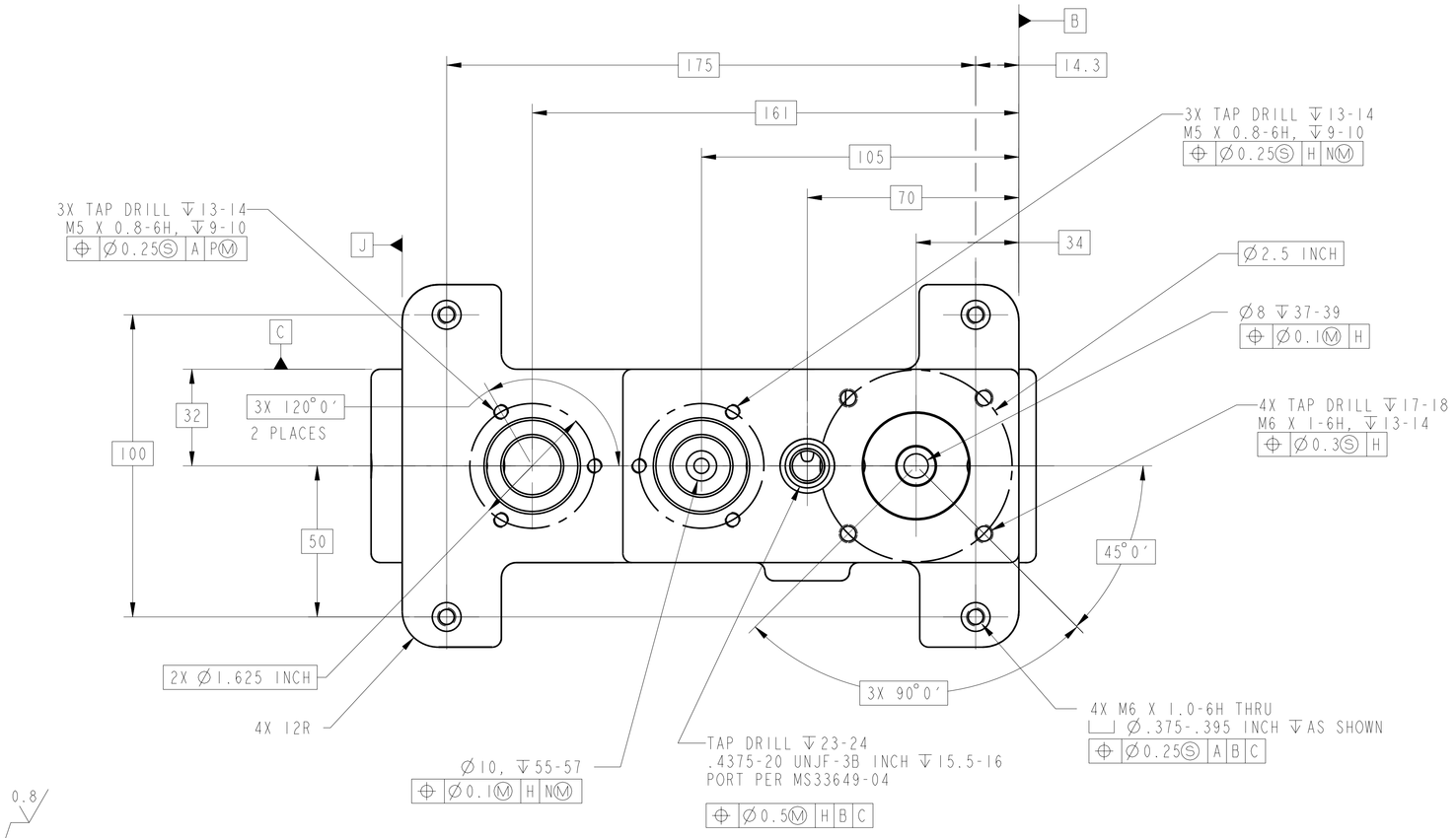

VIEW **E-E**

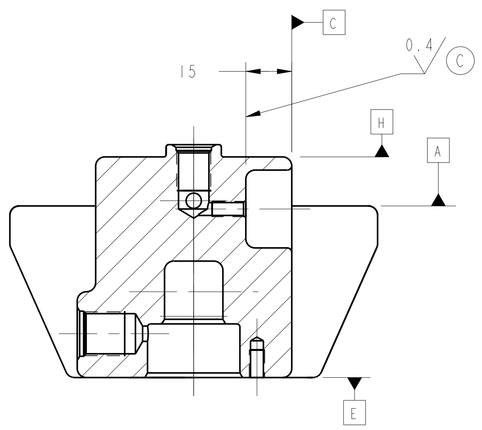

SECTION **B-B**

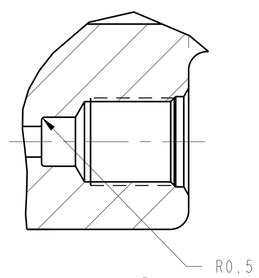

DETAIL **A**
SCALE 2:1

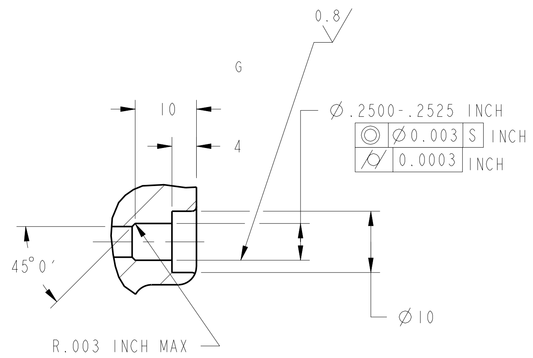

DETAIL **B**
SCALE 2:1

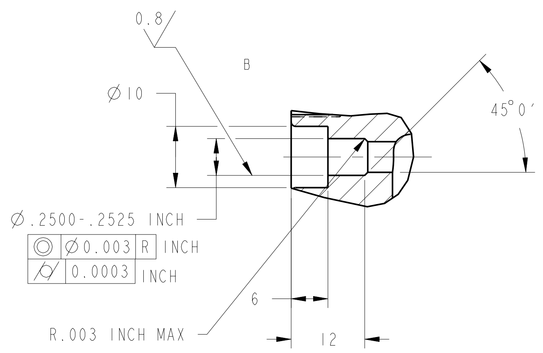

DETAIL **C**
SCALE 2:1

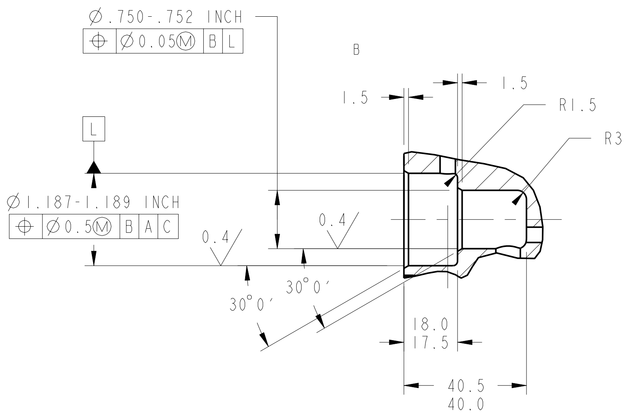

DETAIL **H**
SCALE 1:1

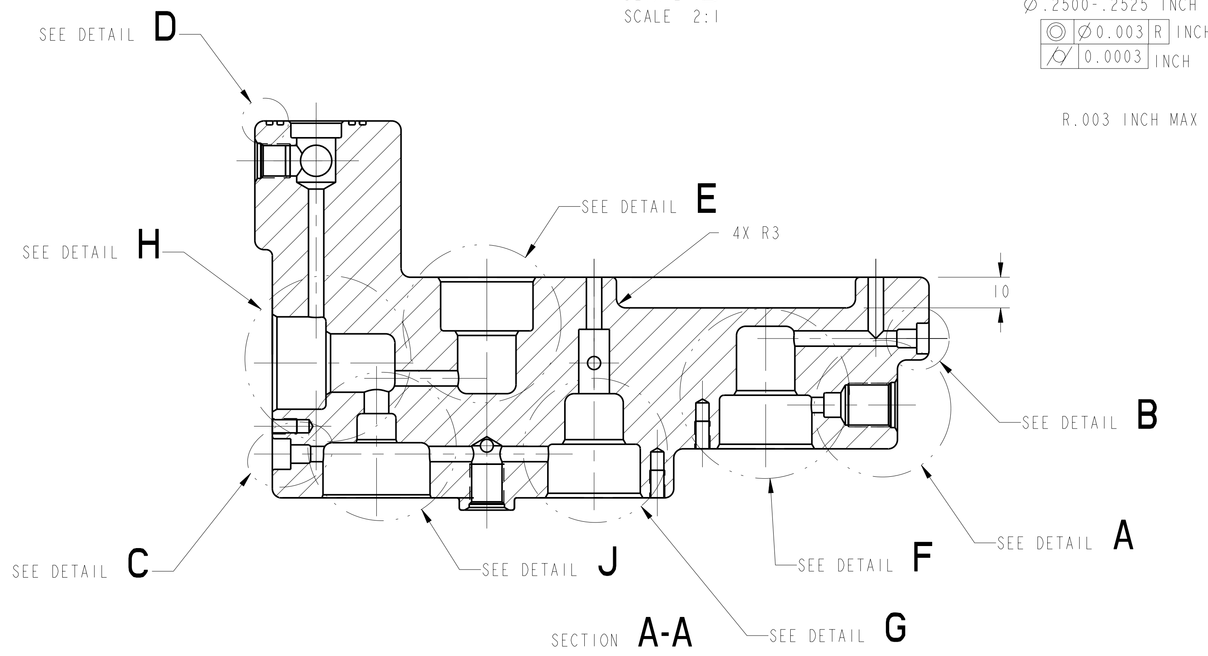

SECTION **A-A**

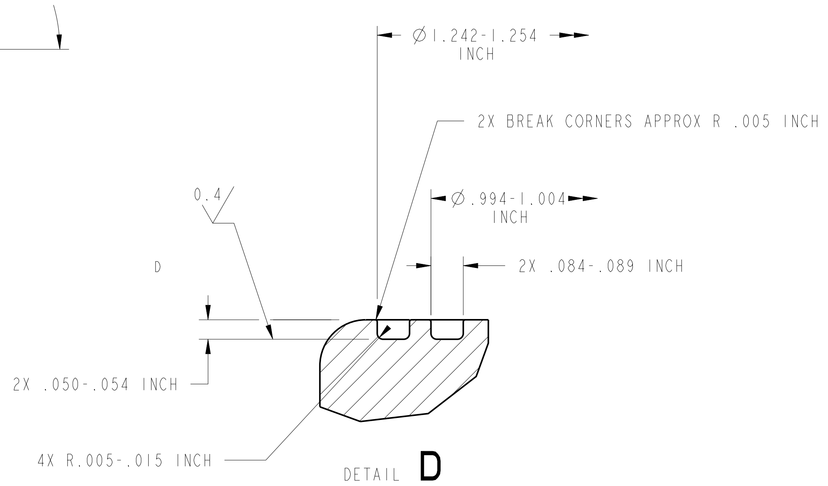

DETAIL **D**
SCALE 5:1

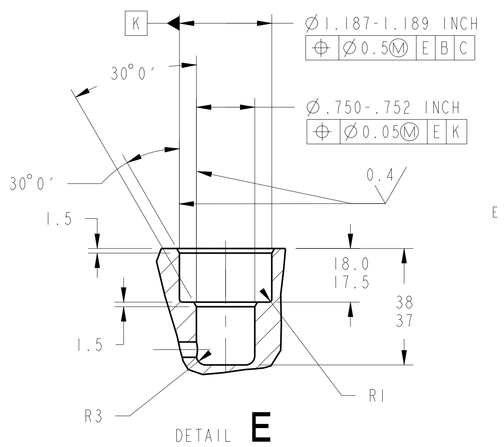

DETAIL **E**
SCALE 1:1

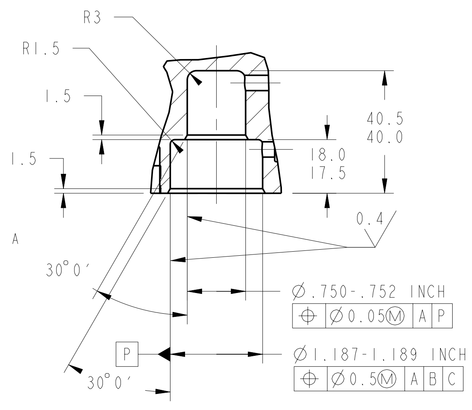

DETAIL **F**
SCALE 1:1

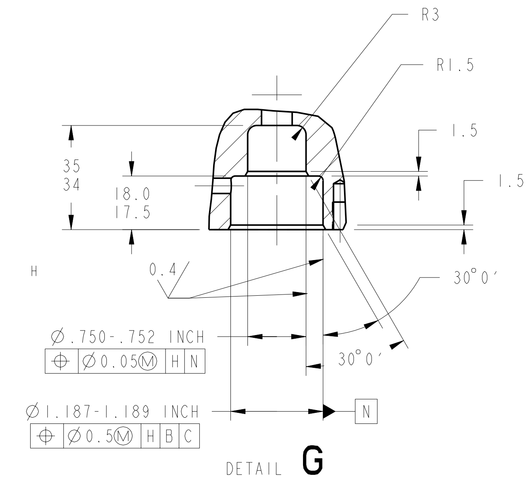

DETAIL **G**
SCALE 1:1

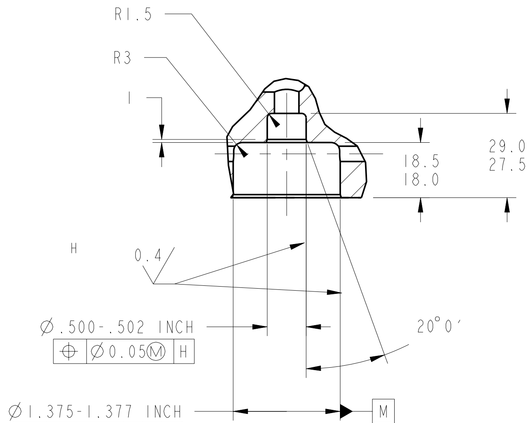

DETAIL **J**
SCALE 1:1

CHG	ZONE	DESCRIPTION	APP/DATE
B	G2	↧17-18 WAS ↧14-15 & ↧13-14 WAS ↧10-11	DAR 06/24/98
A	-	SEE SHEET 1 OF 2	DAR 06/17/98

SIZE	DRAWING NUMBER	REV	STAT	BLDG/CELL
A0	67212MEDM451	A	-	333/ -

METRIC | SCALE: 1:1 | SHEET 2 OF 2

CHECKPRINT

DRAWING NUMBER 67212MEDM451

NAME:EDERA OBJECT:67212MEDM451.2 DATE:30-Oct-00 11:52:03