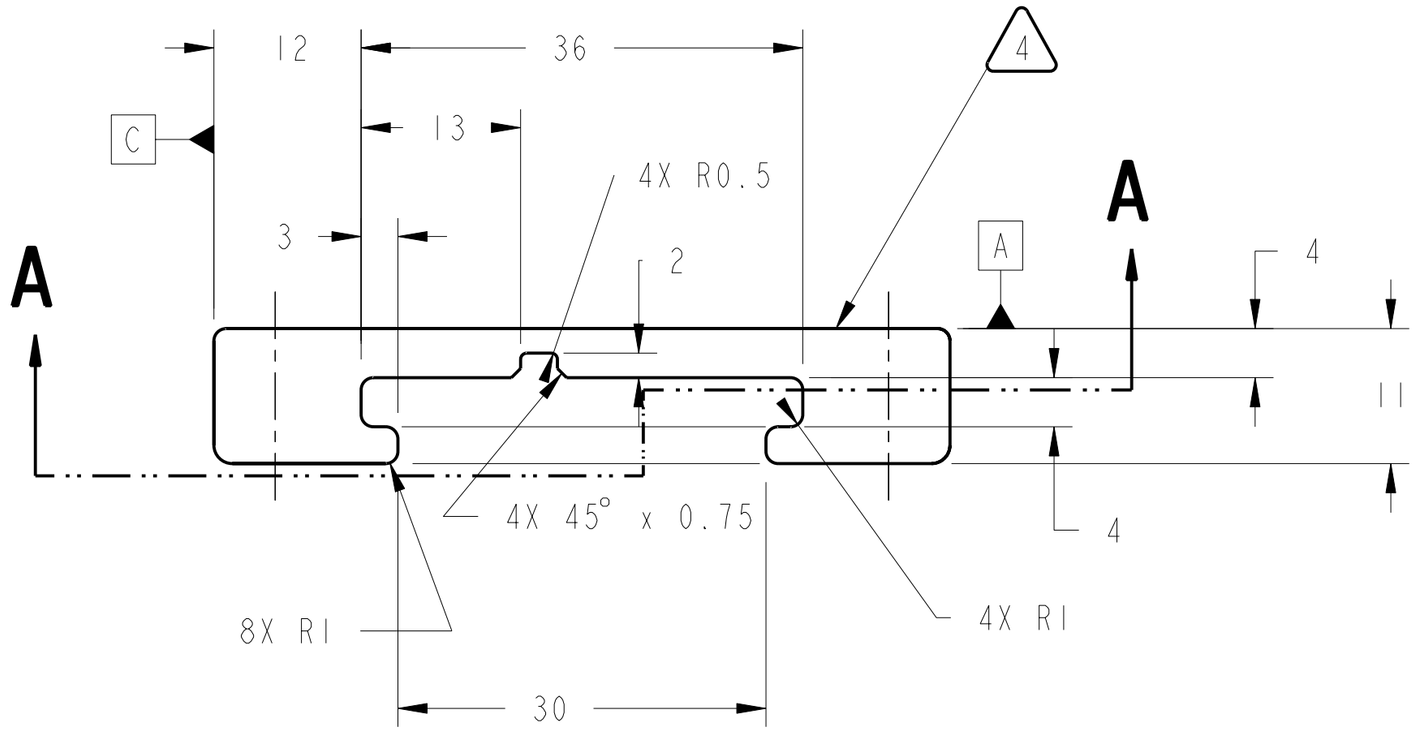

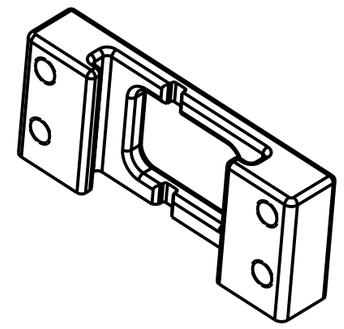

ISO VIEW
SCALE 1:1

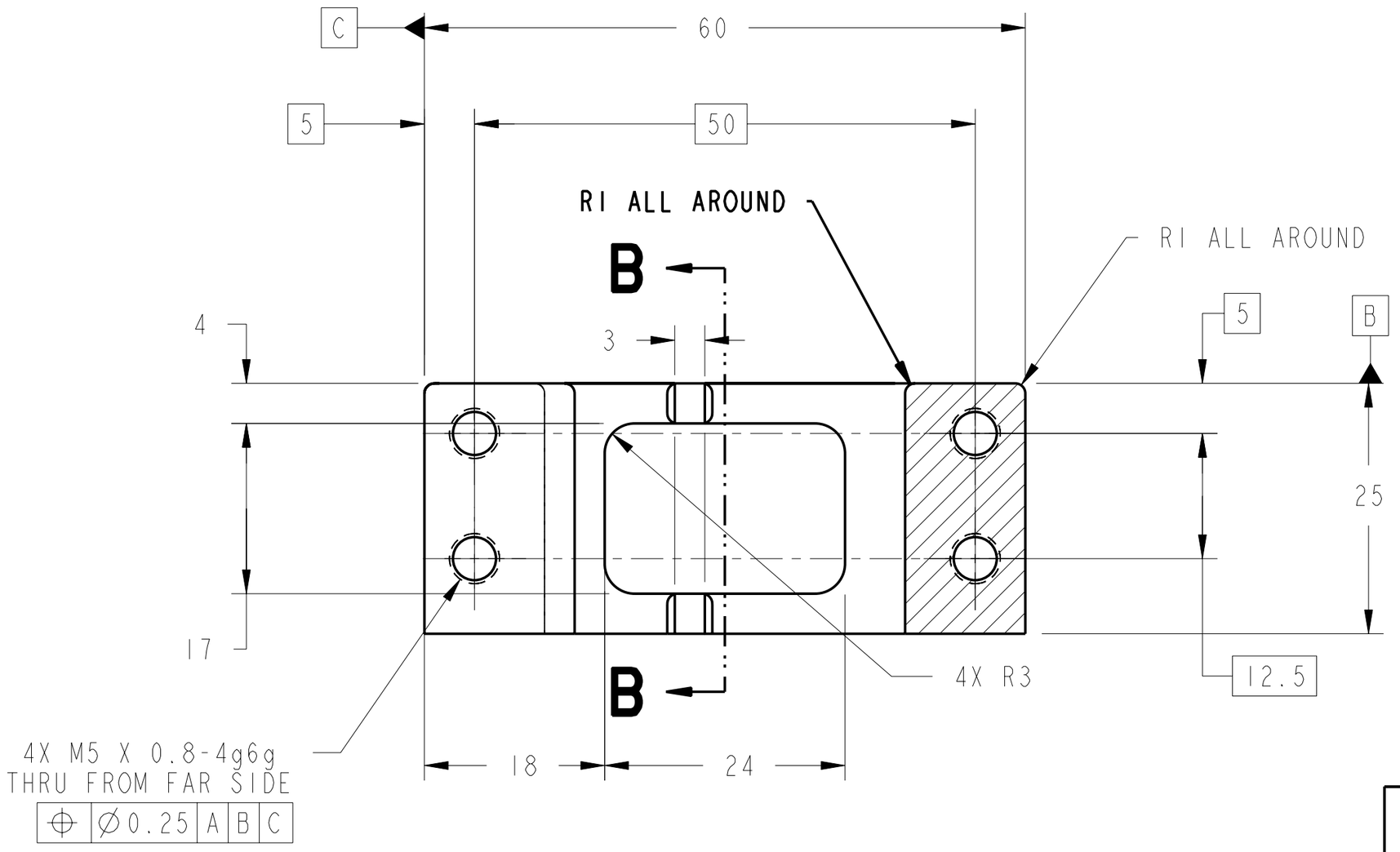

SECTION A-A

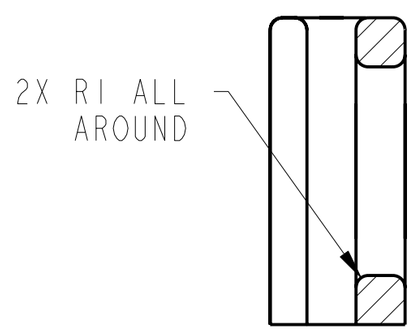

SECTION B-B

1. MATERIAL:
   TYPE 304 STAINLESS STEEL PER FEDERAL SPEC QQ-S-763 OR QQ-S-766.
2. CERTIFICATE OF CONFORMANCE REQUIRED FOR MATERIAL.
3. 0.8 Ra ALL OVER PER ANSI/ASME B46.1.
4. ELECTROCHEMICAL ETCH PART NUMBER 67212MEDM427 ON SPECIFIED SURFACE, PER SAE AS478, METHOD 7A (ZONE D4).
5. CLEAN AND PASSIVATE PER MIL-S-5002, PARAGRAPHS 3.4.2.4 AND 3.4.2.4.1, AND FEDERAL SPECIFICATION QQ-P-35.
6. TREAT ALL SURFACES, EXCEPT TAPPED HOLES, WITH XYLAN COATING-1010, COLOR ORANGE, .001-.003 INCHES THICK. APPLY PER MANUFACTURER RECOMMENDED SPECIFICATIONS. ALL DIMENSIONS APPLY AFTER TREATMENT.
7. CLEAN SURFACES WITH 190 PROOF ETHYL ALCOHOL. WIPE WITH CLEAN COTTON SWABS AND/OR LINT-FREE CLOTH.
8. BEFORE STORAGE, PROTECT PART WITH CONTAMINATION BARRIER. USE CLEAN, NEW, TRANSPARENT, POLYETHYLENE BAG SEALED WITH FIBERGLASS PACKAGING TAPE. SEAL AND MARK WITH IDENTIFICATION NUMBER ON TAG ATTACHED TO BAG.
9. PROCESS PLAN REQUIRED.
10. ESTIMATED WEIGHT: 0.064 Kg.
11. QUANTITY: ONE REQUIRED.

UNLESS OTHERWISE SPECIFIED:
1. ALL DIMENSIONING AND TOLLERANCING PER ASME Y14.5M-1994
2. ALL DIMENSIONS ARE IN MILLIMETERS
3. BREAK EDGES: 0.2-0.5
4. LINEAR TOLERANCES:
   0.5-6 ±0.1
   OVER 6-30 ±0.2
   OVER 30-120 ±0.3
   OVER 120-315 ±0.5
   OVER 315-1000 ±0.8
   OVER 1000-2000 ±1.2
5. ANGULAR TOLERANCES: 0° 30′

METRIC

THIRD ANGLE PROJECTION

DRAFTER	ADF/D.ROBINSON
DESIGNER	ADF/D.ROBINSON
ENGINEER	ANLX/D.CATALANO
MODEL NAME: 67212MEDM427	
PRO/E VERSION: 19.0	
RELEASE DATE: 12/29/98	

CHG	ZONE	DESCRIPTION	APP/DATE

REVISIONS

NATIONAL AERONAUTICS AND SPACE ADMINISTRATION
LEWIS RESEARCH CENTER
CLEVELAND, OHIO

427 FRONT GUIDE BLOCK

DILUENT/PREMIXED GAS MANIFOLD ASSEMBLY
67212MELM400

SIZE	DRAWING NUMBER	REV	STAT	BLDG/CELL
A2	67212MEDM427	-	R	333/ -

SCALE: 2:1 SHEET 1 OF 1

DRAWING NUMBER 67212MEDM427
REV -
STAT R

NAME:EDJEN OBJECT:67212MEDM427 DATE:30-Oct-00 11:50:45