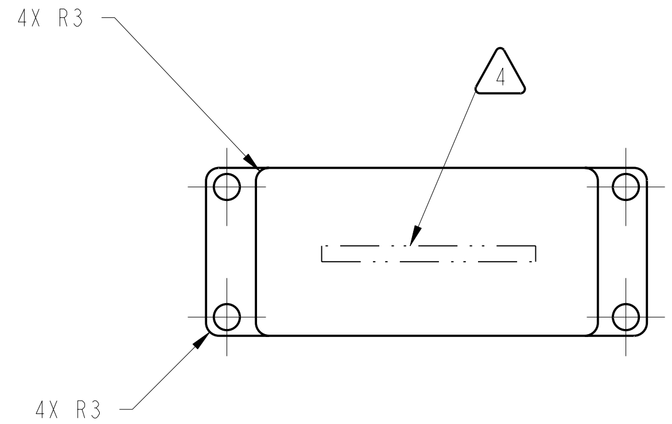

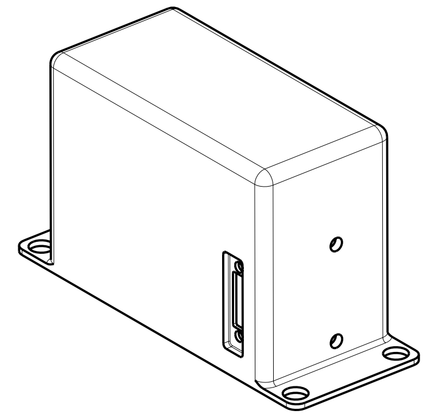

ISO VIEW
TANGENT EDGE LINES SHOWN

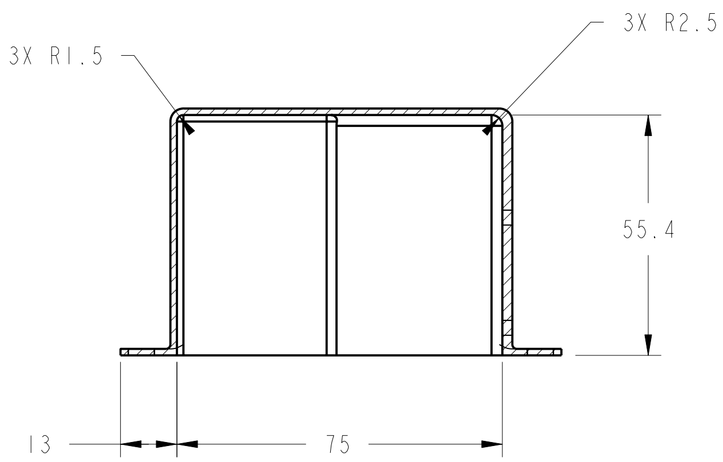

SECTION A-A

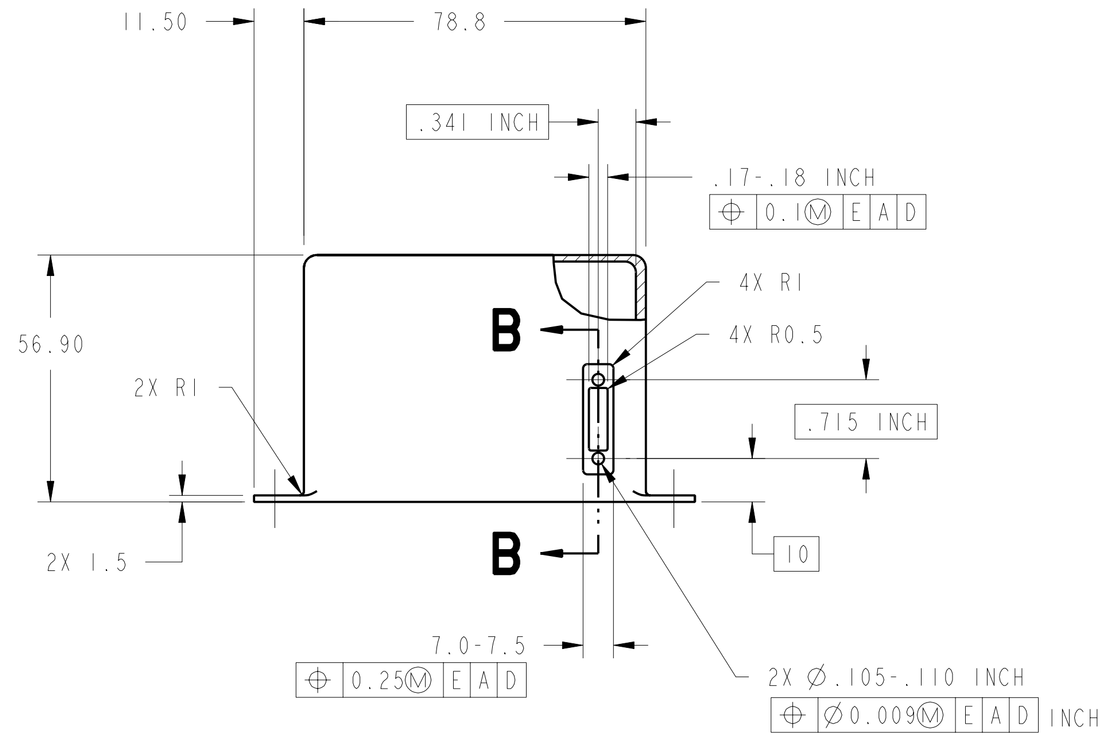

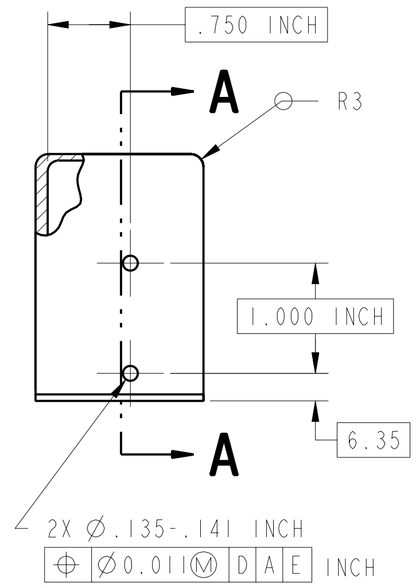

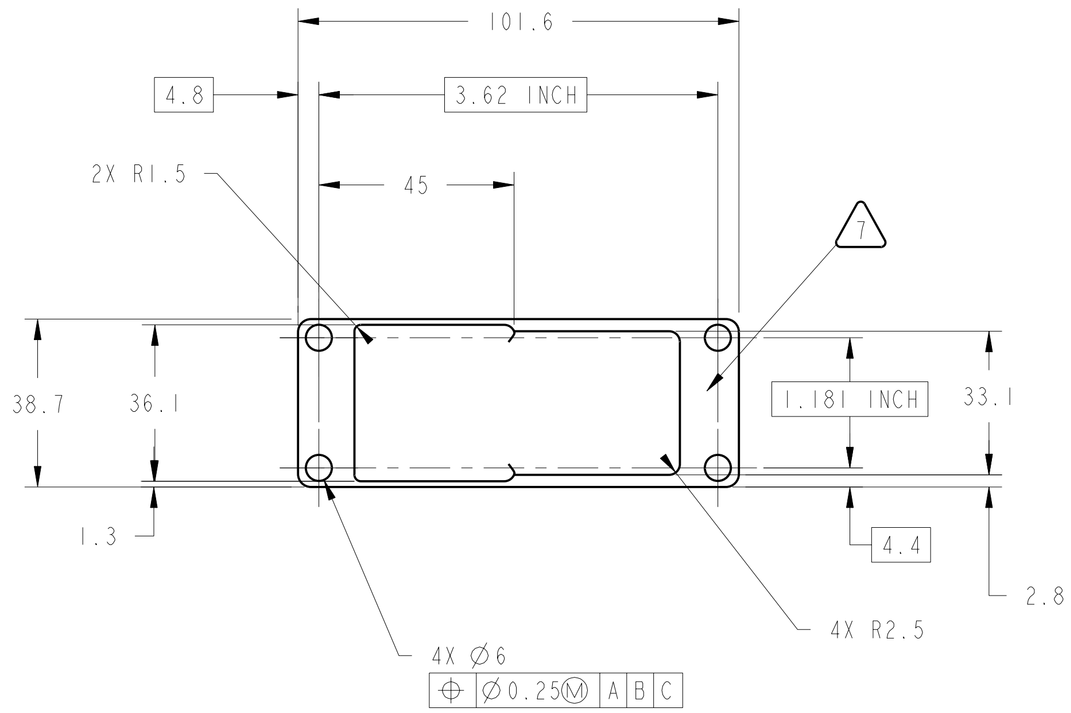

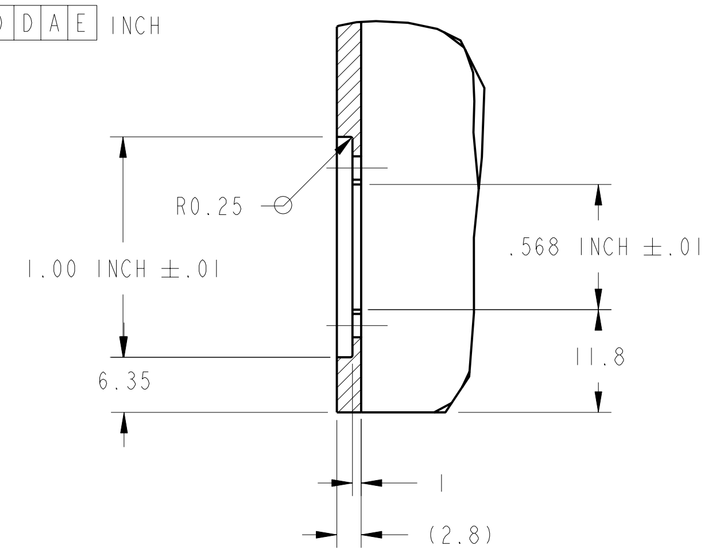

SECTION B-B
SCALE 2:1

1. MATERIAL: ALUMINUM 6061-T6 PER FEDERAL SPEC. QQ-A-250/11.
2. CERTIFICATION OF CHEMICAL AND MECHANICAL PROPERTIES REQUIRED.
3. 3.2 Ra ALL MACHINED SURFACES.
4. ELECTROCHEMICAL ETCH DRAWING PART NUMBER 67212MEDM361 ON SPECIFIED SURFACE PER SAE AS478, METHOD 7A (ZONE F5).
5. SURFACE TREATMENT PER MIL-C-5541, CLASS 3. USE IRIDITE 14.2 OR REQUESTER APPROVED EQUAL PER MIL-C-81706, CLASS 3, FORM II, METHOD B OR C AS APPLICABLE. SPOT TOUCH UP BY METHOD B.
6. HARD FLAT BLACK ANODIZE ALL EXTERNAL SURFACES, EXCEPT SURFACE NOTED, PER MIL-A-8625, TYPE III, CLASS 2. ALL DIMENSIONS APPLY AFTER ANODIZING.
7. DO NOT BLACK ANODIZE THIS SURFACE.
8. CLEAN SURFACES WITH 190 PROOF ETHYL ALCOHOL. WIPE CLEAN WITH LINT-FREE CLOTH.
9. HANDLE WITH CLEAN, LINT-FREE GLOVES.
10. BEFORE STORAGE, PROTECT WITH CONTAMINTION BARRIER. USE CLEAN, NEW, TRANSPARENT POLYETHYLENE BAG SEALED WITH FIBERGLASS PACKAGING TAPE. SEAL AND MARK WITH IDENTIFICATION NUMBER ON TAG ATTACHED TO BAG.
11. PROCESS PLAN REQUIRED.
12. ESTIMATED WEIGHT: 0.083 Kg.

CHG	ZONE	DESCRIPTION	APP/DATE

REVISIONS

PRIOR TO USE VERIFY THE INTENDED PURPOSE IN PDM ("FOR" ATTRIBUTE)

UNLESS OTHERWISE SPECIFIED:
1. ALL DIMENSIONING AND TOLERANCING PER ASME Y14.5M-1994
2. ALL DIMENSIONS ARE IN MILLIMETERS
3. BREAK EDGES: 0.2-0.5
4. LINEAR TOLERANCES:
   0.5-6 ±0.1
   OVER 6-30 ±0.2
   OVER 30-120 ±0.3
   OVER 120-315 ±0.5
   OVER 315-1000 ±0.8
   OVER 1000-2000 ±1.2
5. ANGULAR TOLERANCES: 0° 30′

CONTRACT	NAS-27600
CONTRACTOR	ANALEX CORP.
TASK ORDER	60
DRAFTER	ANLX/F. PRYLL
ENGINEER	ANLX/D. CATALANO
DESIGNER	ANLX/D. CATALANO

THIRD ANGLE PROJECTION

NATIONAL AERONAUTICS AND SPACE ADMINISTRATION
JOHN H. GLENN RESEARCH CENTER
LEWIS FIELD
CLEVELAND, OHIO

MODIFIED UNIT MFC ASSEMBLY
67212MEDM360

361 MFC SHROUD

PDM REL LEVEL: PDM REVISION:
PDM DATABASE:
MODEL NAME: 67212MEDM361
CHECK FOR ANY OUTSTANDING ECO'S PRIOR TO USE

SIZE	DRAWING NUMBER	REV	BLDG	AREA
A1	67212MEDM361	-	333	-
			UNITS: mm	
SCALE: 1:1 AND NOTED	INITIAL REL DATE XX/XX/XXXX	SHEET 1 OF 1	DISCIPLINE MECHANICAL	

SIZE A1 DRAWING NUMBER 67212MEDM361 REV -

PRO/E VERSION: 20.0

NAME:EDJEN OBJECT:67212MEDM361 DATE:30-Oct-00 11:48:59