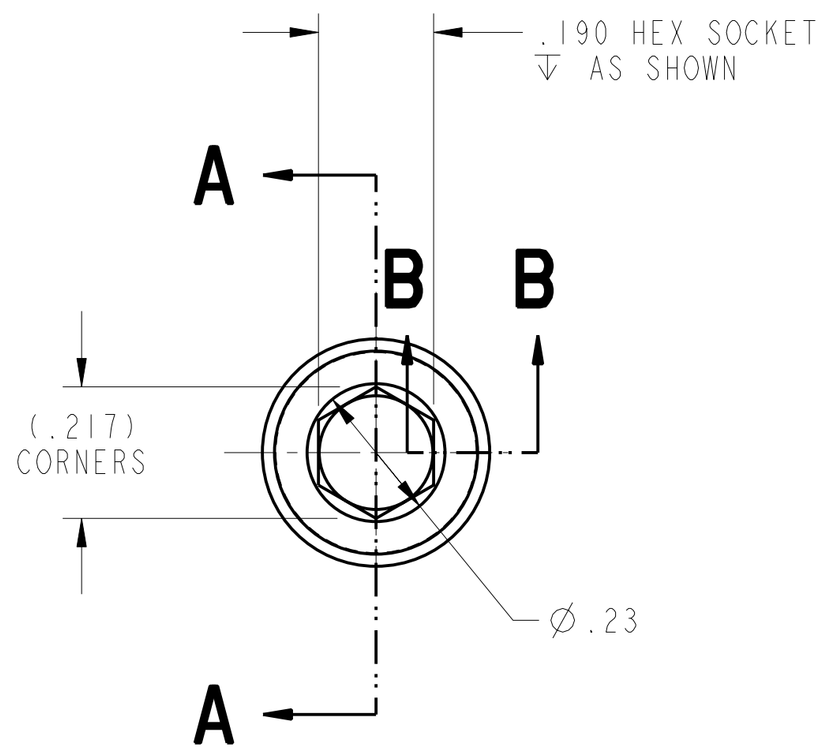

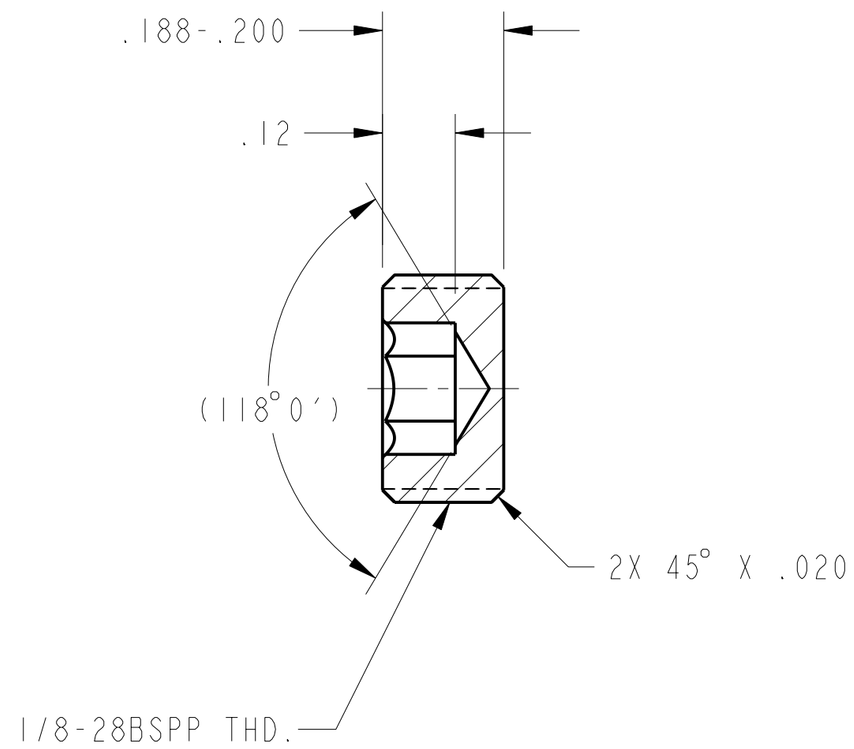

SECTION **A-A**

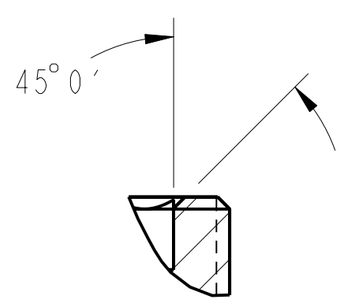

SECTION **B-B**

1. MATERIAL:
   TYPE 304 STAINLESS STEEL PER FEDERAL SPEC QQ-S-763. (OPTIONAL CONSTRUCTION: M/F HEAD OF 1/4-20 HEX SOCKET HEAD CAP SCREW, MATL: 18-8 STAINLESS STEEL).
2. CERTIFICATE OF CONFORMANCE REQUIRED FOR MATERIAL.
3. 32 Ra ALL MACHINED SURFACES PER ANSI/ASME B46.1.
4. CLEAN AND PASSIVATE PER MIL-S-5002, PARAGRAPHS 3.4.2.4 AND 3.4.2.4.1 AND FEDERAL SPECIFICATION QQ-P-35.
5. IDENTIFY BY TAGGING WITH DRAWING PART NUMBER 67212MEDM339, PER SAE AS478, METHOD 35.
6. CLEAN SURFACES WITH 190 PROOF ETHYL ALCOHOL. WIPE WITH CLEAN COTTON SWABS AND/OR LINT-FREE CLOTH.
7. HANDLE WITH CLEAN, LINT-FREE GLOVES.
8. BEFORE STORAGE, PROTECT WITH CONTAMINATION BARRIER. USE CLEAN, NEW, TRANSPARENT, POLYETHYLENE BAG SEALED WITH FIBERGLASS PACKAGING TAPE. SEAL AND MARK WITH IDENTIFICATION NUMBER ON TAG ATTACHED TO BAG.
9. PROCESS PLAN REQUIRED.
10. ESTMATED WEIGHT = 0.005 Lb.

CHG	ZONE	DESCRIPTION	APP/DATE
A	C3	DIM. 1/8-28BSPP THD. WAS: .375-28UN-3A THD.	LT 04/19/00

REVISIONS

UNLESS OTHERWISE SPECIFIED DIMENSIONS ARE IN INCHES	
TOLERANCE ON	
.X	± 0.0
.XX	± 0.01
.XXX	± 0.005
FRACTION	± -
ANGULAR	± 0.50°
BREAK EDGES	.002-.005
DIMENSIONING AND TOLERANCING PER ASME Y14.5M-1994	

CONTRACT	NAS3-27600
CONTRACTOR	ADF, INC.
TASK ORDER	60
APPROVED	-
DRAFTER	ADF/D.ROBINSON
ENGINEER	ANLX/I.DRALYUK
DESIGNER	ADF/D.ROBINSON
MODEL NAME: 67212MEDM339	
PRO/E VERSION: 19.0	
RELEASE DATE	05/17/99

NATIONAL AERONAUTICS AND SPACE ADMINISTRATION
LEWIS RESEARCH CENTER
CLEVELAND, OHIO

339 SOLENOID COIL NUT LOCKING SCREW

SOLENOID COIL ASSEMBLY

67212MELM337

SIZE	DRAWING NUMBER	REV	STAT	BLDG/CELL
C	67212MEDM339	-	-	333/-

SCALE: 4/1 SHEET 1 OF 1

DRAWING NUMBER 67212MEDM339

REV - STAT -

NAME:EDJEN OBJECT:67212MEDM339 DATE:30-Oct-00 11:44:28