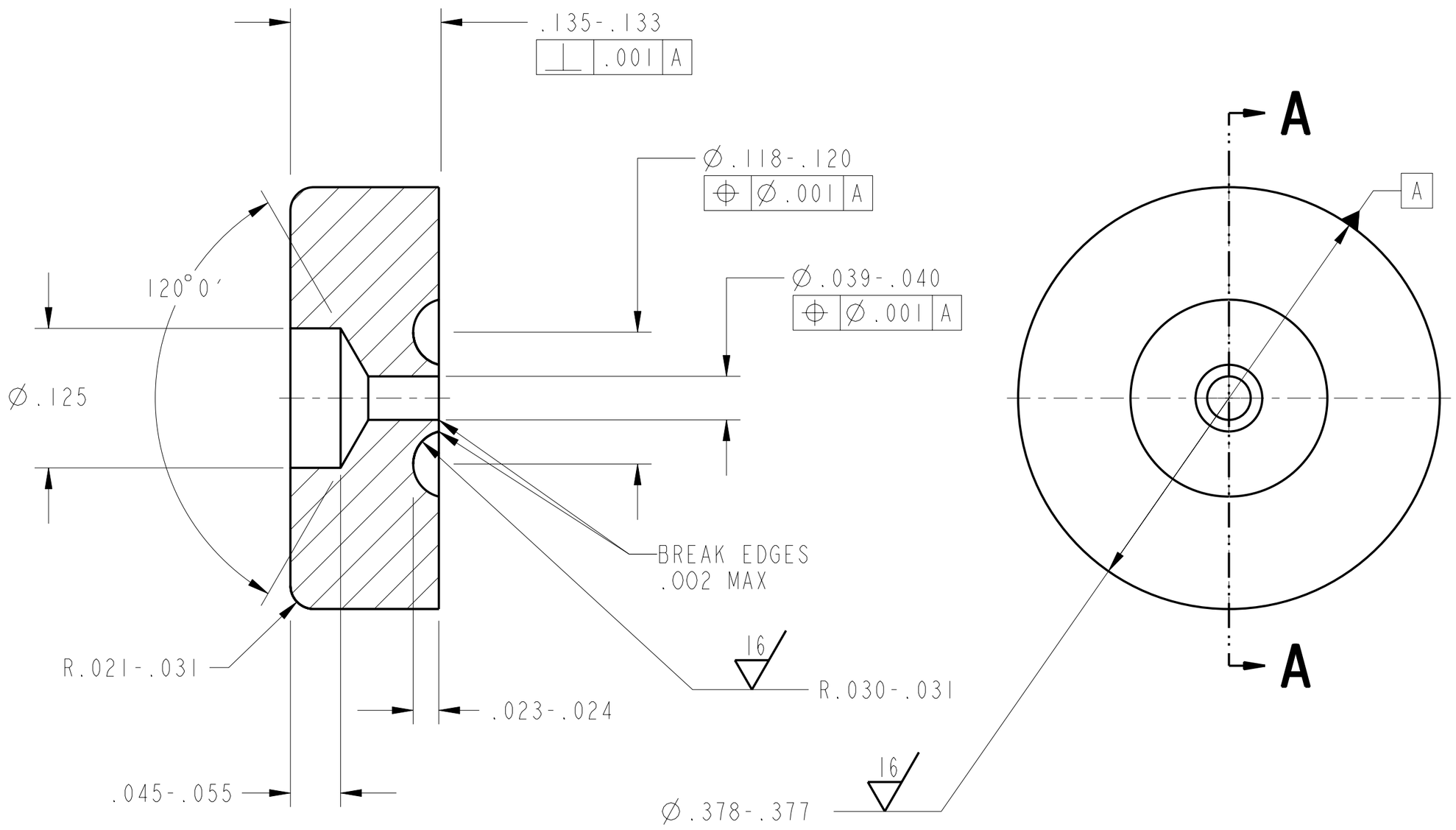

SECTION **A-A**

1. MATERIAL:
   VESPEL POLYIMIDE SP-21 PLASTIC.
2. CERTIFICATE OF CONFORMANCE REQUIRED FOR MATERIAL.
3. 32 µIN Ra ALL OVER, EXCEPT AS NOTED, PER ANSI/ASME B46.1.
4. CLEAN SURFACES WITH NON-DEODORANT, NONADDITIVE SOAP AND WATER. WIPE WITH CLEAN LINT-FREE CLOTH (NO PAPER PRODUCTS).
5. IDENTIFY BY TAGGING WITH DRAWING PART NUMBER 67212MEDM333, PER SAE AS478, METHOD 35.
6. HANDLE WITH CLEAN, LINT-FREE GLOVES.
7. BEFORE STORAGE, PROTECT WITH CONTAMINATION BARRIER. USE CLEAN, NEW, TRANSPARENT, POLYETHYLENE BAG SEALED WITH FIBERGLASS PACKAGING TAPE. SEAL AND MARK WITH IDENTIFICATION NUMBER ON TAG ATTACHED TO BAG.
8. PROCESS PLAN REQUIRED.

CHG	ZONE	DESCRIPTION	APP/DATE

REVISIONS

UNLESS OTHERWISE SPECIFIED DIMENSIONS ARE IN INCHES	
TOLERANCE ON	
.X	± 0.1
.XX	± 0.01
.XXX	± 0.001
FRACTION	± -
ANGULAR	± 0.50°
BREAK EDGES	.002-.003
DIMENSIONING AND TOLERANCING PER ASME Y14.5M-1994	

CONTRACT	NAS3-27600
CONTRACTOR	ADF, INC.
TASK ORDER	60
APPROVED	-
DRAFTER	ADF/D.ROBINSON
ENGINEER	ANLX/I.DRALYUK
DESIGNER	ADF/D.ROBINSON
MODEL NAME: 67212MEDM333	
PRO/E VERSION: 19.0	
RELEASE DATE	05/11/99

NATIONAL AERONAUTICS AND SPACE ADMINISTRATION
LEWIS RESEARCH CENTER
CLEVELAND, OHIO

333

1/4" HIGH PRESSURE VALVE SEAT INSERT

1/4" HIGH PRESSURE VALVE ASSEMBLIES
67212MELM310, M455 & M460

SIZE	DRAWING NUMBER	REV	STAT	BLDG/CELL
C	67212MEDM333	-	R	333/-

SCALE: 10/1 SHEET 1 OF 1

DRAWING NUMBER 67212MEDM333 REV - STAT R

NAME:EDJEN OBJECT:67212MEDM333 DATE:30-Oct-00 11:41:58