1. MATERIAL:
   300 SERIES STAINLESS STEEL WIRE.
2. CERTIFICATE OF CONFORMANCE REQUIRED FOR MATERIAL.
3. 1.6 Ra ALL MACHINED SURFACES PER ANSI/ASME B46.1.
4. CLEAN AND PASSIVATE PER MIL-S-5002, PARAGRAPHS 3.4.2.4 AND 3.4.2.4.1 AND FEDERAL SPECIFICATION QQ-P-35.
5. CLEAN SURFACES WITH 190 PROOF ETHYL ALCOHOL. WIPE WITH CLEAN COTTON SWABS AND/OR LINT-FREE CLOTH.
6. BEFORE STORAGE, PROTECT WITH CONTAMINATION BARRIER. USE CLEAN, NEW, TRANSPARENT, POLYETHYLENE BAG SEALED WITH FIBERGLASS PACKAGING TAPE. SEAL AND MARK WITH IDENTIFICATION NUMBER ON TAG ATTACHED TO BAG.
7. IDENTIFY BY TAGGING WITH DRAWING PART NUMBER 67212MEDM332, PER SAE AS478, METHOD 35.
8. PROCESS PLAN REQUIRED.
9. ESTIMATED WEIGHT: 0.005 Kg.
10. QUANTITY: ONE REQUIRED.

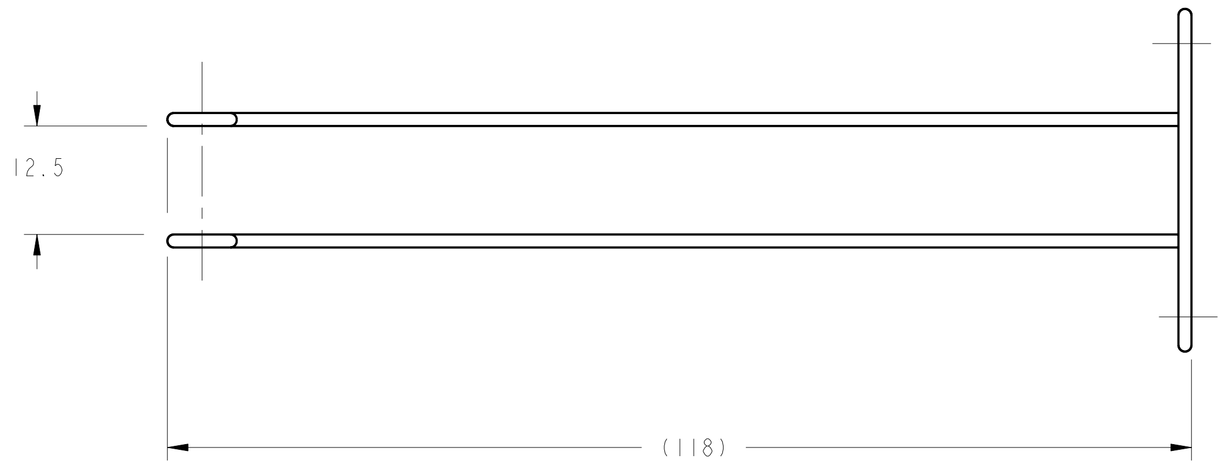

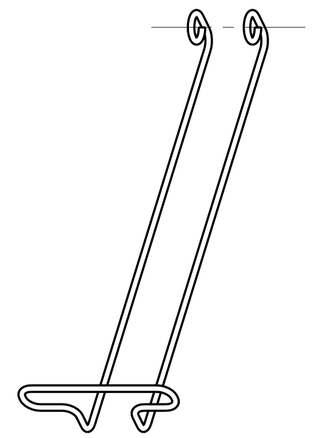

ISO VIEW
SCALE 1:1

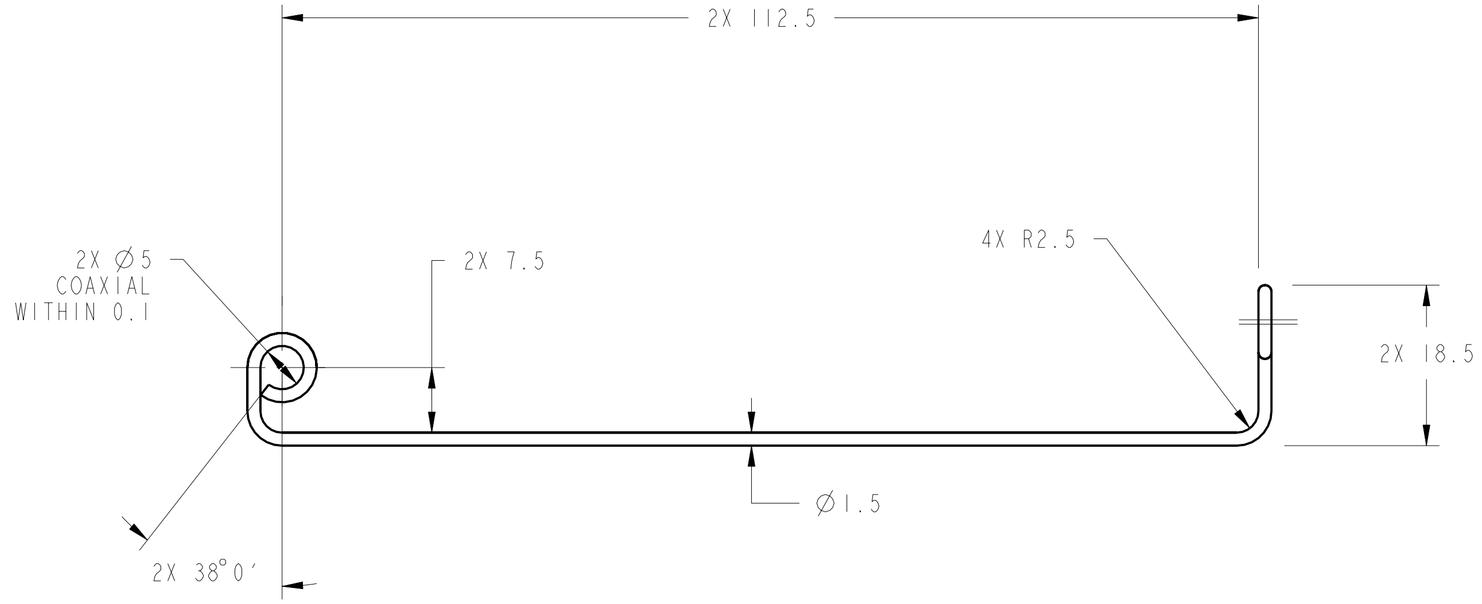

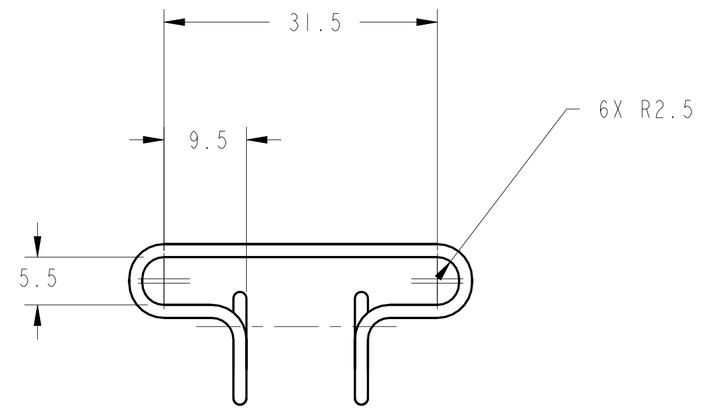

UNLESS OTHERWISE SPECIFIED:
1. ALL DIMENSIONING AND TOLLERANCING PER ASME Y14.5M-1994
2. ALL DIMENSIONS ARE IN MILLIMETERS
3. BREAK EDGES: 0.2-0.5
4. LINEAR TOLERANCES:
   0.5-6 ±0.1
   OVER 6-30 ±0.2
   OVER 30-120 ±0.3
   OVER 120-315 ±0.5
   OVER 315-1000 ±0.8
   OVER 1000-2000 ±1.2
5. ANGULAR TOLERANCES: 0° 30′

METRIC

THIRD ANGLE PROJECTION

DRAFTER	ADF/D.ROBINSON
DESIGNER	ADF/D.ROBINSON
ENGINEER	ANLX/D.CATALANO
MODEL NAME: 67212MEDM332	
PRO/E VERSION: 19.0	
RELEASE DATE: 12/29/98	

CHG	ZONE	DESCRIPTION	APP/DATE

REVISIONS

NATIONAL AERONAUTICS AND SPACE ADMINISTRATION
LEWIS RESEARCH CENTER
CLEVELAND, OHIO

332 REAR BOTTLE RETAINING CLIP

FUEL MAINIFOLD ASSEMBLY
67212MELM300

SIZE	DRAWING NUMBER	REV	STAT	BLDG/CELL
A1	67212MEDM332	-	R	333/-

SCALE: 2:1 SHEET 1 OF 1

DRAWING NUMBER 67212MEDM332
REV -
STAT R

NAME:EDJEW OBJECT:67212MEDM332 DATE:30-Oct-00 11:41:30