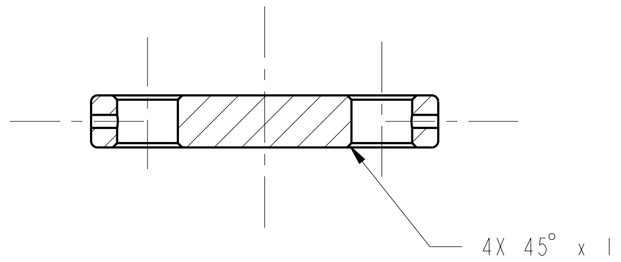

SECTION **A-A**

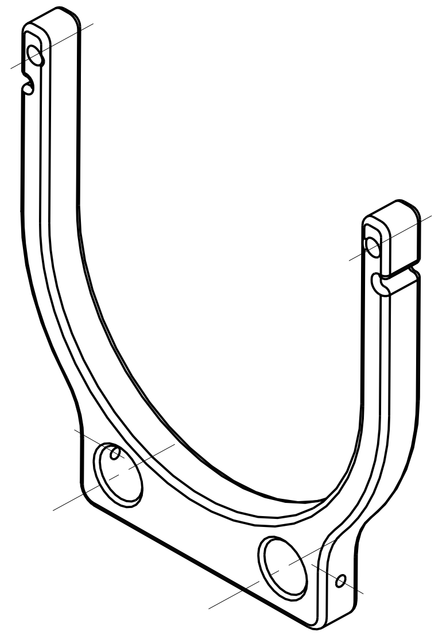

ISO VIEW
SCALE 1:1

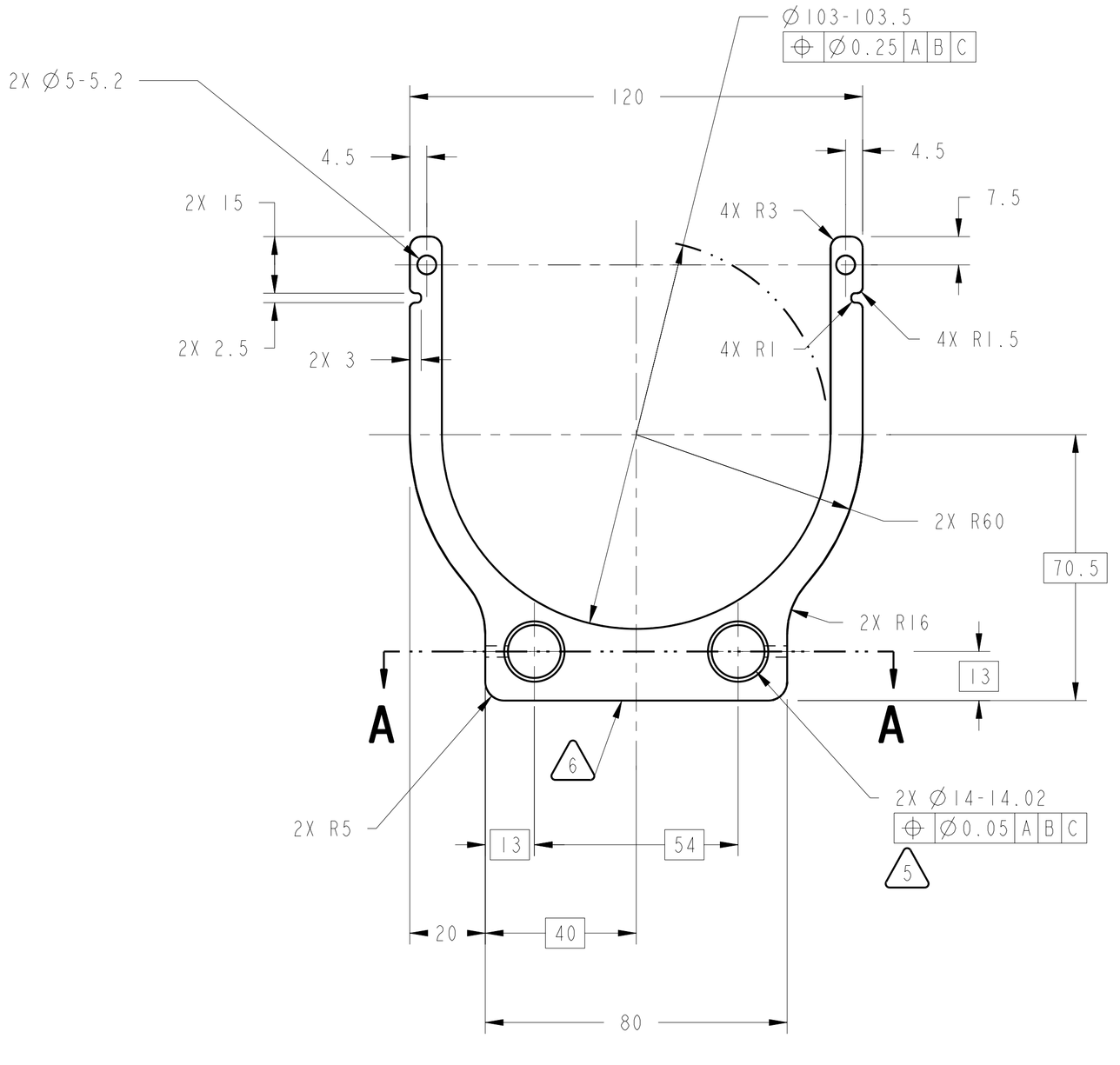

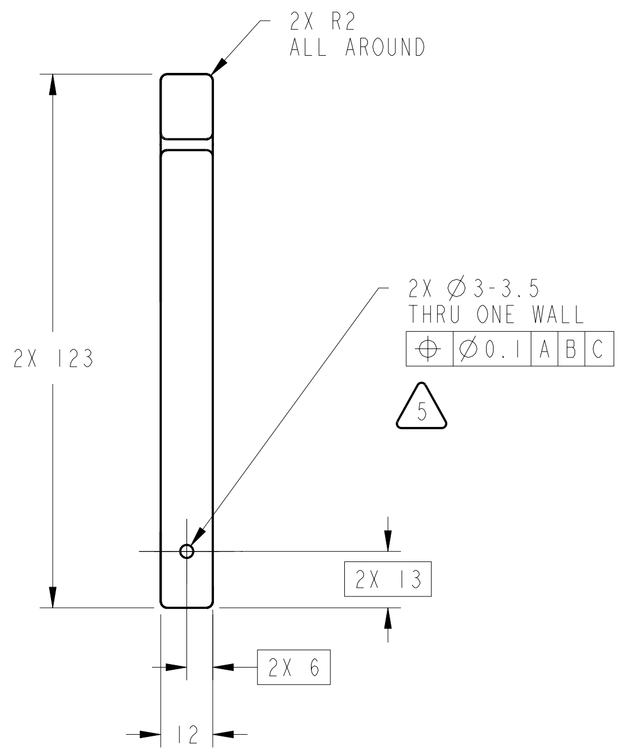

1. MATERIAL:
   6061-T651 ALUMINUM PER FEDERAL SPECIFICATION QQ-A-250/11.
2. CERTIFICATE OF CONFORMANCE REQUIRED FOR MATERIAL.
3. 1.6 Ra ALL MACHINED SURFACES PER ANSI/ASME B46.1.
4. HARD BLACK ANODIZE PER MIL-A-8625, TYPE III, CLASS 2, .001-.002 INCH THICK. ALL DIMENSIONS APPLY AFTER ANODIZING.
5. DO NOT ANODIZE HOLES NOTED. SURFACE TREAT HOLES PER MIL-C-5541, CLASS 3. USE IRIDITE 14.2 OR REQUESTER APPROVED EQUAL PER MIL-C-81706, CLASS 3, FORM II, METHOD B OR C AS APPLICABLE. SPOT TOUCH UP BY METHOD B.
6. ELECTROCHEMICAL ETCH DRAWING PART NUMBER 67212MEDM328 ON SPECIFIED SURFACE PER SAE AS478, METHOD 7A (ZONE B7).
7. CLEAN SURFACES WITH 190 PROOF ETHYL ALCOHOL. WIPE WITH CLEAN COTTON SWABS AND/OR LINT-FREE CLOTH.
8. BEFORE STORAGE, PROTECT WITH CONTAMINATION BARRIER. USE CLEAN, NEW, TRANSPARENT, POLYETHYLENE BAG SEALED WITH FIBERGLASS PACKAGING TAPE. SEAL AND MARK WITH IDENTIFICATION NUMBER ON TAG ATTACHED TO BAG.
9. PROCESS PLAN REQUIRED.
10. ESTIMATED WEIGHT: 0.1 Kg.
11. QUANTITY: ONE REQUIRED

CHG	ZONE	DESCRIPTION	APP/DATE

REVISIONS

UNLESS OTHERWISE SPECIFIED:
1. ALL DIMENSIONING AND TOLLERANCING PER ASME Y14.5M-1994
2. ALL DIMENSIONS ARE IN MILLIMETERS
3. BREAK EDGES: 0.2-0.5
4. LINEAR TOLERANCES:
   0.5-6 ±0.1
   OVER 6-30 ±0.2
   OVER 30-120 ±0.3
   OVER 120-315 ±0.5
   OVER 315-1000 ±0.8
   OVER 1000-2000 ±1.2
5. ANGULAR TOLERANCES: 0° 30'

METRIC

THIRD ANGLE PROJECTION

DRAFTER	ADF/M.AYNIK
DESIGNER	ADF/D.ROBINSON
ENGINEER	ANLX/D.CATALANO
MODEL NAME: 67212MEDM328	
PRO/E VERSION: 19.0	
RELEASE DATE: 12/29/98	

NATIONAL AERONAUTICS AND SPACE ADMINISTRATION
LEWIS RESEARCH CENTER
CLEVELAND, OHIO

328 BOTTLE REAR SUPPORT

BOTTLE REAR SUPPORT ASSEMBLY
67212MELM328

SIZE	DRAWING NUMBER	REV	STAT	BLDG/CELL
A1	67212MEDM328	-	R	333/-

SCALE: 1:1 SHEET 1 OF 1

DRAWING NUMBER 67212MEDM328
REV -
STAT R

NAME:EDJEN OBJECT:67212MEDM328 DATE:30-Oct-00 11:40:24