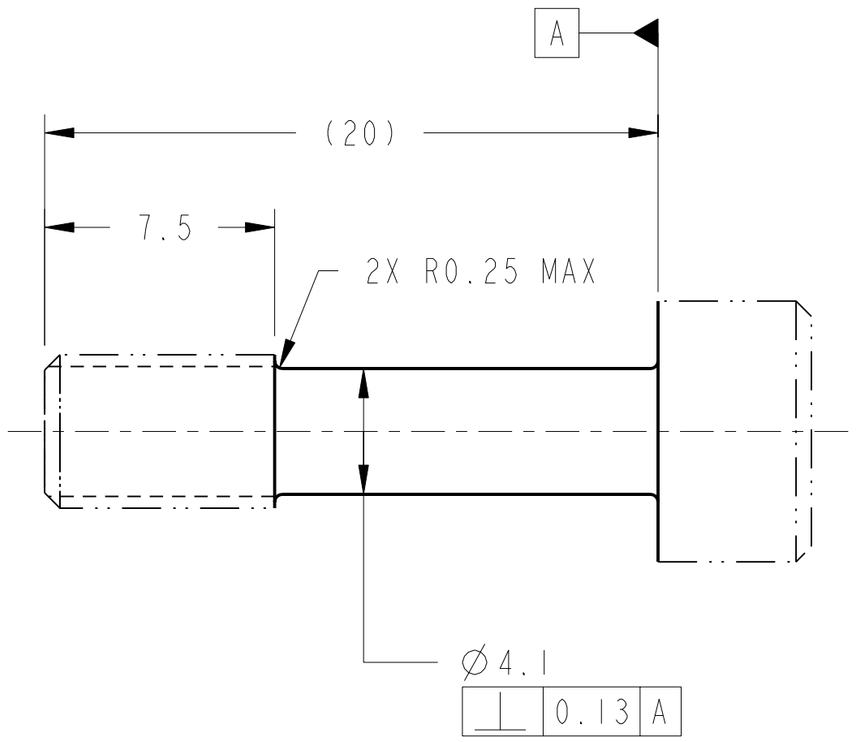

1. MATERIAL:
   MAKE FROM M5 X 0.8-4g6g X 20 LG SOCKET HEAD CAP SCREW PER ASME/ANSI B18.3.1M. MATERIAL: 300 SERIES STAINLESS STEEL.

2. CERTIFICATE OF CONFORMANCE REQUIRED FOR MATERIAL.

3. 3.2 Ra ALL MACHINED SURFACES PER ANSI/ASME B46.1.

4. CLEAN SURFACES WITH 190 PROOF ETHYL ALCOHOL. WIPE WITH CLEAN COTTON SWABS AND/OR LINT-FREE CLOTH.

5. IDENTIFY BY TAGGING WITH DRAWING PART NUMBER 67212MEDM318, PER SAE AS478, METHOD 35.

6. BEFORE STORAGE, PROTECT WITH CONTAMINATION BARRIER. USE CLEAN, NEW, TRANSPARENT, POLYETHYLENE BAG SEALED WITH FIBERGLASS PACKAGING TAPE. SEAL AND MARK WITH IDENTIFICATION NUMBER ON TAG ATTACHED TO BAG.

7. PROCESS PLAN REQUIRED.

CHG	ZONE	DESCRIPTION	APP/DATE

REVISIONS

UNLESS OTHERWISE SPECIFIED:
1. ALL DIMENSIONING AND TOLLERANCING PER ASME Y14.5M-1994
2. ALL DIMENSIONS ARE IN MILLIMETERS
3. BREAK EDGES: 0.2-0.5
4. LINEAR TOLERANCES:
   0.5-6 ±0.1
   OVER 6-30 ±0.2
   OVER 30-120 ±0.3
   OVER 120-315 ±0.5
   OVER 315-1000 ±0.8
   OVER 1000-2000 ±1.2
5. ANGULAR TOLERANCES: 0° 30′

METRIC

THIRD ANGLE PROJECTION

DRAFTER	ADF/M.AYNIK
DESIGNER	ADF/D.ROBINSON
ENGINEER	ANLX/D.CATALANO
MODEL NAME: 67212MEDM318	
PRO/E VERSION: 18.0	
RELEASE DATE: 05/11/99	

NATIONAL AERONAUTICS AND SPACE ADMINISTRATION
LEWIS RESEARCH CENTER
CLEVELAND, OHIO

318

MODIFIED
M5 SOCKET HEAD CAP SCREW

QD MOUNTING PLATE ASSEMBLY
67212MELM302

SIZE	DRAWING NUMBER	REV	STAT	BLDG/CELL
A2	67212MEDM318	-	R	333/-

SCALE: 5:1 SHEET 1 OF 1

DRAWING NUMBER 67212MEDM318
REV -
STAT R

NAME:EDJEN OBJECT:67212MEDM318 DATE:30-Oct-00 11:36:43