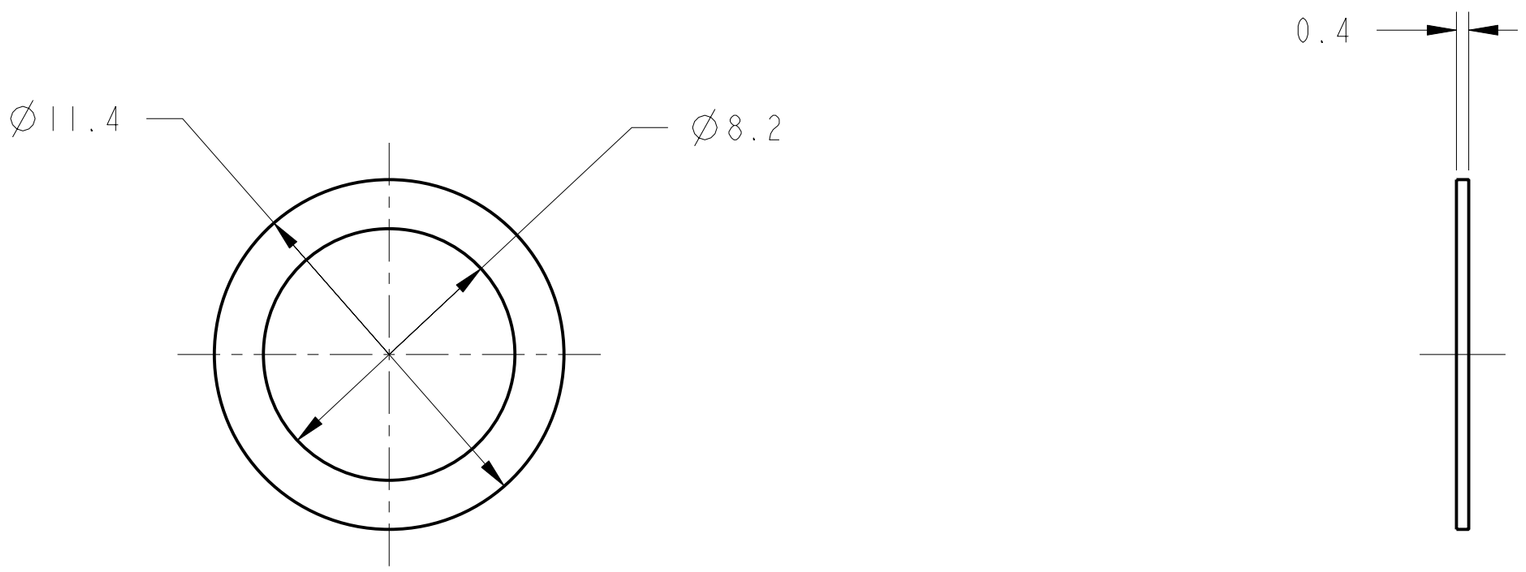

1. MATERIAL:
   100 PERCENT COPPER, HALF HARD CONDITION.

2. CERTIFICATE OF CONFORMANCE REQUIRED FOR MATERIAL.

3. 0.8 Ra ALL MACHINED SURFACES PER ANSI/ASME B46.1.

4. CLEAN SURFACES WITH 190 PROOF ETHYL ALCOHOL. WIPE WITH CLEAN COTTON SWABS AND/OR LINT-FREE CLOTH.

5. IDENTIFY BY TAGGING WITH DRAWING PART NUMBER 67212MEDM317, PER SAE AS478, METHOD 35.

6. BEFORE STORAGE, PROTECT WITH CONTAMINATION BARRIER. USE CLEAN, NEW, TRANSPARENT, POLYETHYLENE BAG SEALED WITH FIBERGLASS PACKAGING TAPE. SEAL AND MARK WITH IDENTIFICATION NUMBER ON TAG ATTACHED TO BAG.

7. PROCESS PLAN REQUIRED.

8. QUANTITY: ONE REQUIRED.

UNLESS OTHERWISE SPECIFIED:

1. ALL DIMENSIONING AND TOLLERANCING PER ASME Y14.5M-1994
2. ALL DIMENSIONS ARE IN MILLIMETERS
3. BREAK EDGES: 0.2-0.5
4. LINEAR TOLERANCES:
   0.5-6 ±0.1
   OVER 6-30 ±0.2
   OVER 30- 120 ±0.3
   OVER 120-315 ±0.5
   OVER 315-1000 ±0.8
   OVER 1000-2000 ±1.2
5. ANGULAR TOLERANCES: 0° 30′

METRIC

THIRD ANGLE PROJECTION

DRAFTER	M. AYNIK
DESIGNER	D. ROBINSON
ENGINEER	D. CATALANO
MODEL NAME: 67212MEDM317	
PRO/E VERSION: 18.0	
RELEASE DATE: XX/XX/XX	

CHG	ZONE	DESCRIPTION	APP/DATE

REVISIONS

NATIONAL AERONAUTICS AND SPACE ADMINISTRATION
LEWIS RESEARCH CENTER
CLEVELAND, OHIO

317 SEAL WASHER

PRESSURE REGULATOR ASSEMBLY
67212MELM330

SIZE	DRAWING NUMBER	REV	STAT	BLDG/CELL
A2	67212MEDM317	-	-	333/-

SCALE: 5:1 SHEET 1 OF 1

CHECKPRINT

DRAWING NUMBER 67212MEDM317

REV -

STAT -

NAME:EDJEN OBJECT:67212MEDM317 DATE:30-Oct-00 11:36:22