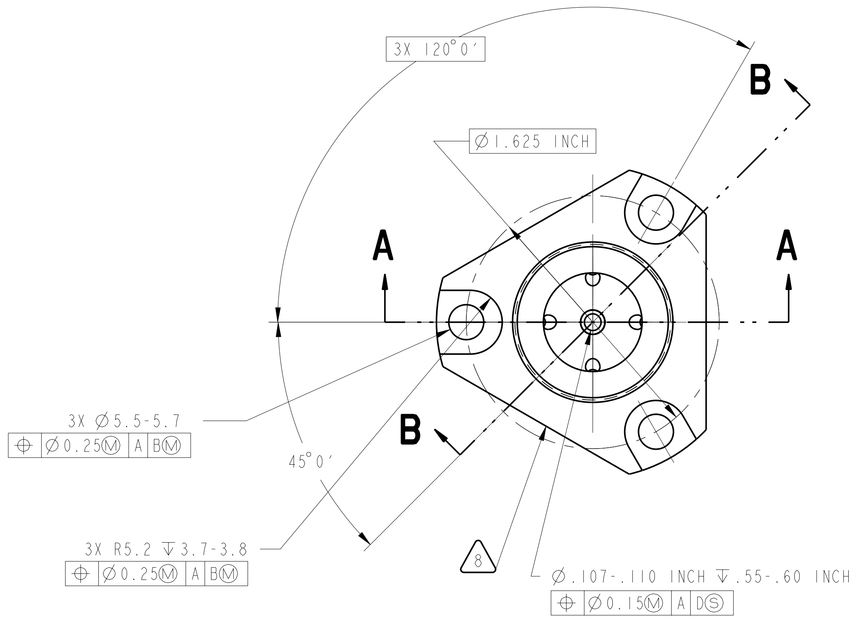

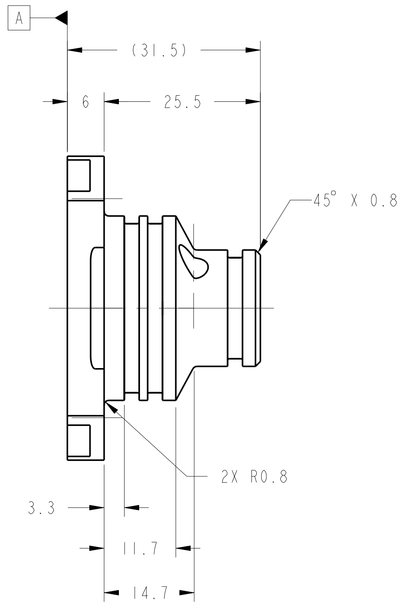

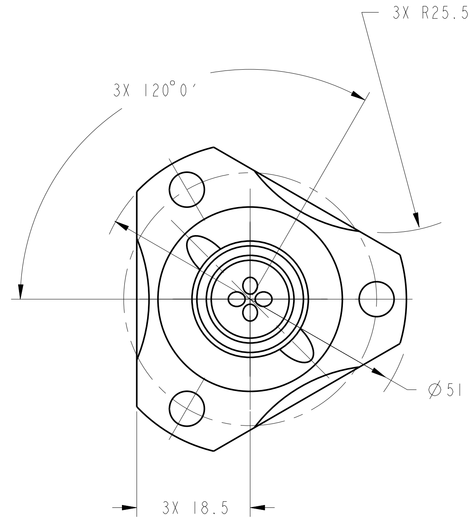

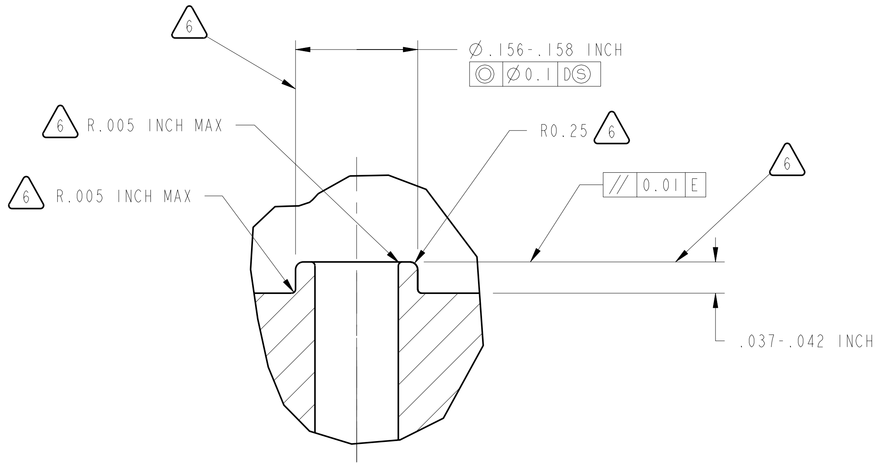

DETAIL D
SCALE 10:1

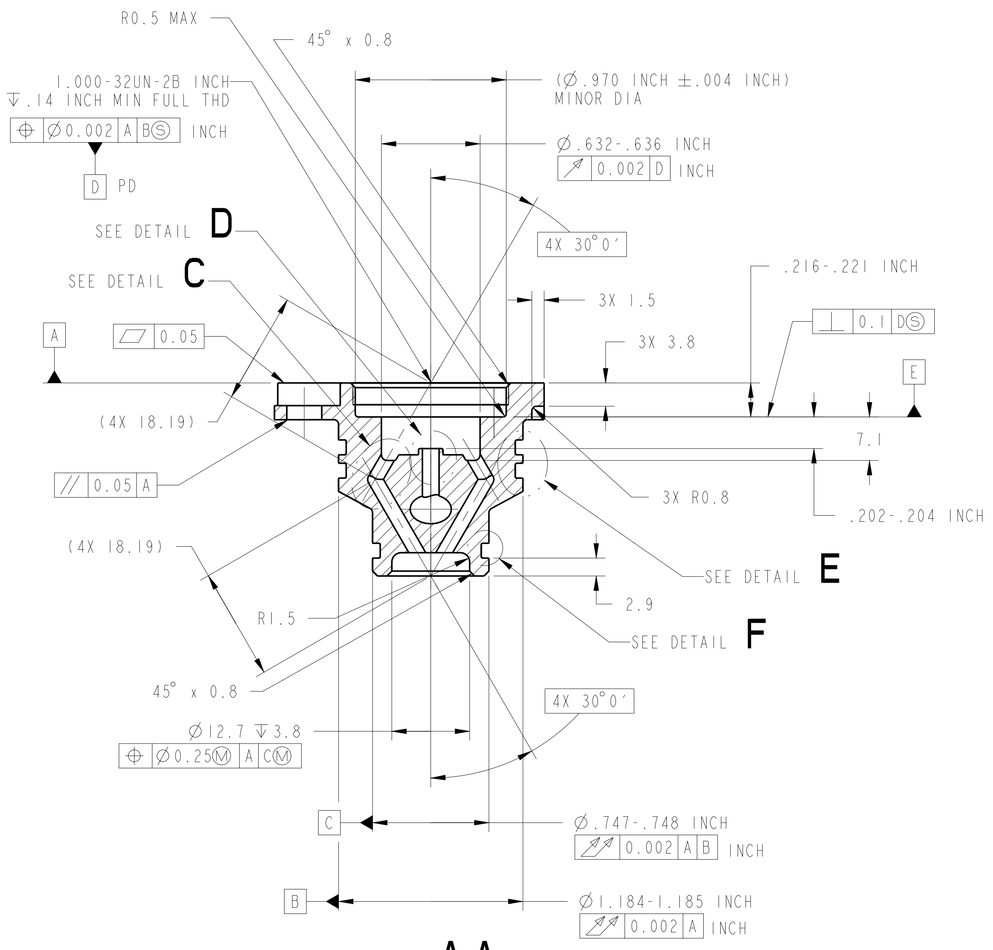

SECTION A-A

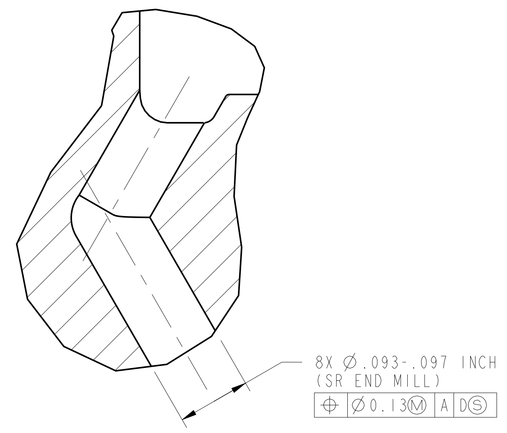

DETAIL C
SCALE 10:1

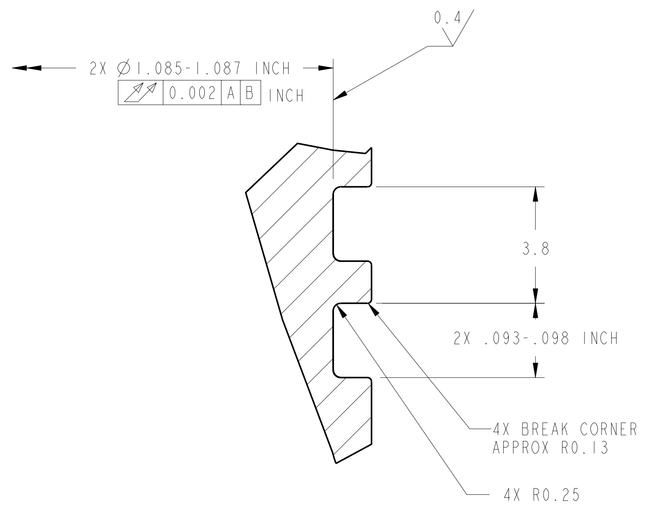

DETAIL E
SCALE 10:1

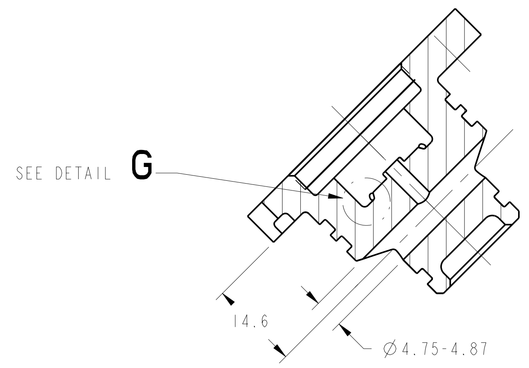

SECTION B-B

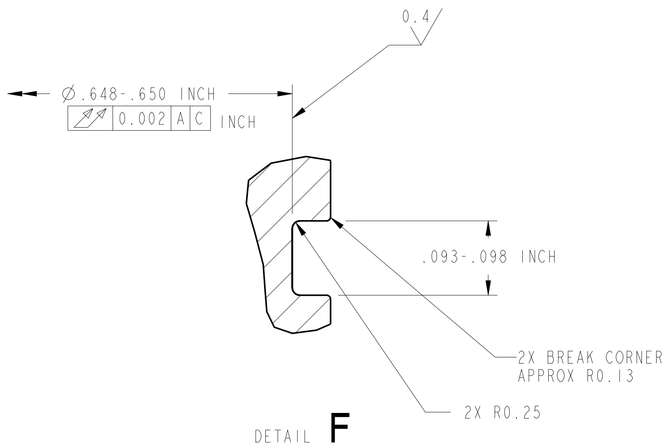

DETAIL F
SCALE 10:1

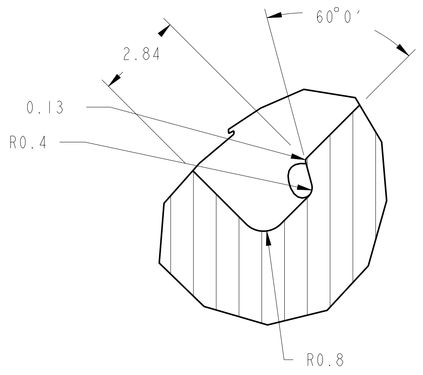

DETAIL G
SCALE 10:1

1. MATERIAL:
   TYPE 316 STAINLESS STEEL PER QQ-S-766
2. CERTIFICATE OF CONFORMANCE REQUIRED FOR MATERIALS.
3. ULTRASONIC INSPECT PER MIL-STD-2154, PRIOR TO FABRICATION. ACCEPTANCE PER SECTION 5.5.4., TABLE VI, CLASS LEVEL A.
4. 1.6 Ra ALL OVER UNLESS OTHERWISE NOTED.
5. ALL INTERNAL PORTS MUST BE BLENDED SMOOTH WITH NO FEATHERED EDGES OR BURRS.
6. RADIUS INDICATED MUST BLEND WITH ADJOINING SURFACES WITH NO UNDERCUTS AND MUST BE POLISHED SMOOTH WITH NO VISIBLE TOOL MARKS.
7. FINISHED PART MUST PASS DYE PENETRANT INSPECTION PER ASTM E1417. ACCEPTANCE PER MIL-STD-1907.
8. ELECTROCHEMICAL ETCH DRAWING PART NUMBER 67212MEDM316 ON SPECIFIED SURFACE PER SAE AS478, METHOD 7A (ZONE F10.)
9. CLEAN AND PASSIVATE PER MIL-S-5002, PARAGRAPHS 3..4.2.4 AND 3.4.2.4.1. AND QQ-P-35.
10. CLEAN SURFACES WITH 190 PROOF ETHYL ALCOHOL. WIPE WITH CLEAN COTTON SWABS AND/OR LINT-FREE CLOTH.
11. BEFORE STORAGE, PROTECT WITH CONTAMINATION BARRIER. USE CLEAN, NEW, TRANSPARENT, POLYETHYLENE BAG SEALED WITH FIBERGLASS PACKAGING TAPE. SEAL AND MARK WITH IDENTIFICATION NUMBER ON TAG ATTACHED TO BAG.
12. PROCESS PLAN REQUIRED.
13. ESTIMATED WEIGHT = 0.116 Kg.

CHG	ZONE	DESCRIPTION	APP/DATE
A	G3 G/F11 F1/2	DIM WAS Ø1.56-1.58 INCH 3XØ & R WERE INCH DIMS DELETED QTY NOTE AND ADDED NOTES 11 THRU 13	D.ROBINSON 04/26/99

REVISIONS

UNLESS OTHERWISE SPECIFIED:
1. ALL DIMENSIONING AND TOLLERANCING PER ASME Y14.5M-1994
2. ALL DIMENSIONS ARE IN MILLIMETERS
3. BREAK EDGES: 0.2-0.5
4. LINEAR TOLERANCES:
   0.5-6 ±0.1
   OVER 6-30 ±0.2
   OVER 30- 120 ±0.3
   OVER 120-315 ±0.5
   OVER 315-1000 ±0.8
   OVER 1000-2000 ±1.2
5. ANGULAR TOLERANCES: 0° 30"

METRIC

THIRD ANGLE PROJECTION

DRAFTER	ADF/W.HOLT
DESIGNER	ADF/D.ROBINSON
ENGINEER	ANLX/I.DRALYUK
MODEL NAME:	67212MEDM316
PRO/E VERSION:	18.0
RELEASE DATE:	05/01/98

NATIONAL AERONAUTICS AND SPACE ADMINISTRATION
LEWIS RESEARCH CENTER
CLEVELAND, OHIO

316 OUTLET VALVE BODY-SHORT

OUTLET VALVE ASSEMBLY-SHORT
67212MELM315

SIZE	DRAWING NUMBER	REV	STAT	BLDG/CELL
A0	67212MEDM316	A	R	333/ -

SCALE: 2:1 AND NOTED — SHEET 1 OF 1

DRAWING NUMBER 67212MEDM316

NAME:ERGEN OBJECT:67212MEDM316 DATE:30-Oct-00 11:35:55