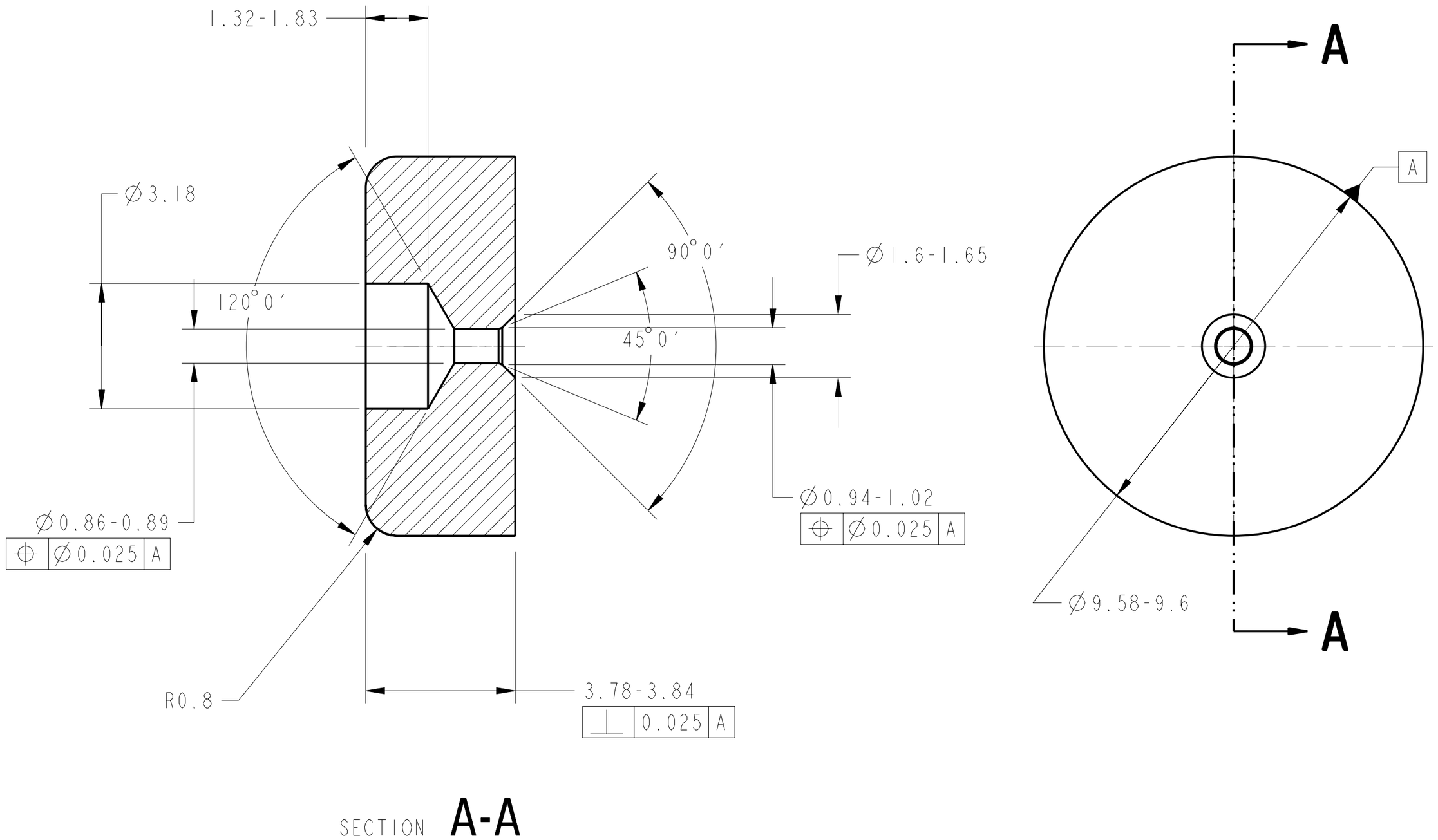

1. MATERIAL:
   VESPEL POLYIMIDE SP-21 PLASTIC.
2. CERTIFICATE OF CONFORMANCE REQUIRED FOR MATERIAL.
3. 0.8 Ra ALL OVER PER ANSI/ASME B46.1.
4. CLEAN SURFACES WITH NON-DEODORANT, NONADDITIVE SOAP AND WATER. WIPE WITH CLEAN LINT-FREE CLOTH (NO PAPER PRODUCTS).
5. IDENTIFY BY TAGGING WITH DRAWING PART NUMBER 67212MEDM313, PER SAE AS478, METHOD 35.
6. HANDLE WITH CLEAN, LINT-FREE GLOVES.
7. BEFORE STORAGE, PROTECT WITH CONTAMINATION BARRIER. USE CLEAN, NEW, TRANSPARENT, POLYETHYLENE BAG SEALED WITH FIBERGLASS PACKAGING TAPE. SEAL AND MARK WITH IDENTIFICATION NUMBER ON TAG ATTACHED TO BAG.
8. QUANTITY: ONE REQUIRED.

UNLESS OTHERWISE SPECIFIED:
1. ALL DIMENSIONING AND TOLLERANCING PER ASME Y14.5M-1994
2. ALL DIMENSIONS ARE IN MILLIMETERS
3. BREAK EDGES: 0.2-0.5
4. LINEAR TOLERANCES:
   0.5-6 ±0.1
   OVER 6-30 ±0.2
   OVER 30- 120 ±0.3
   OVER 120-315 ±0.5
   OVER 315-1000 ±0.8
   OVER 1000-2000 ±1.2
5. ANGULAR TOLERANCES: 0° 30′

METRIC

THIRD ANGLE PROJECTION

DRAFTER	D.ROBINSON
DESIGNER	D.ROBINSON
ENGINEER	D.CATALANO
MODEL NAME: 67212MEDM313	
PRO/E VERSION: 18.0	
RELEASE DATE: XX/XX/XX	

CHG	ZONE	DESCRIPTION	APP/DATE

REVISIONS

NATIONAL AERONAUTICS AND SPACE ADMINISTRATION
LEWIS RESEARCH CENTER
CLEVELAND, OHIO

313

VALVE SEAT INSERT

1/4" HIGH PRESSURE
INLET VALVE ASSEMBLY
67212MELM310

SIZE	DRAWING NUMBER	REV	STAT	BLDG/CELL
A2	67212MEDM313	X		333/-

SCALE: 10/1 SHEET 1 OF 1

DRAWING NUMBER 67212MEDM313 REV X STAT

NAME:EDJEN OBJECT:67212MEDM313 DATE:30-Oct-00 11:34:44