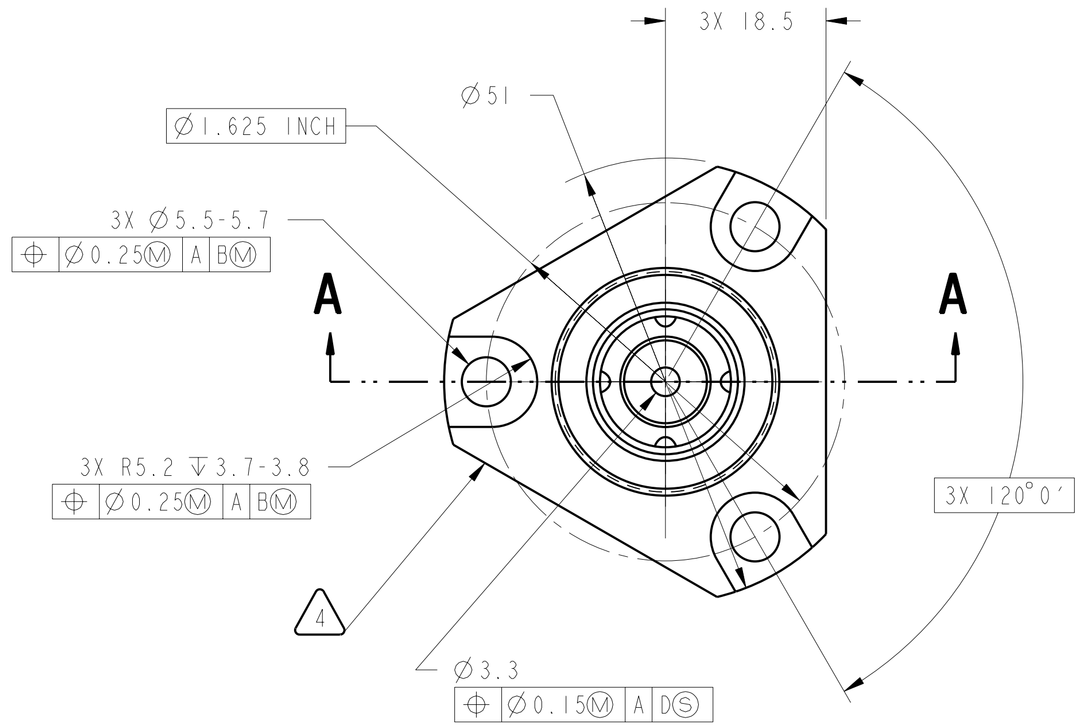

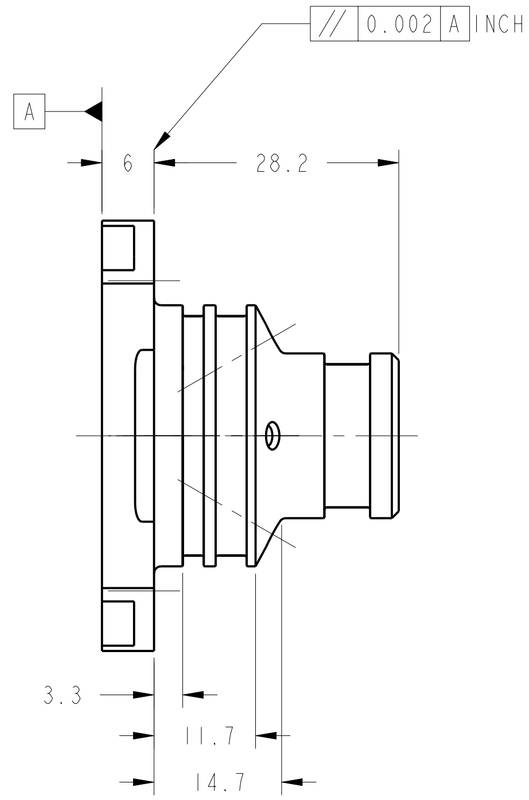

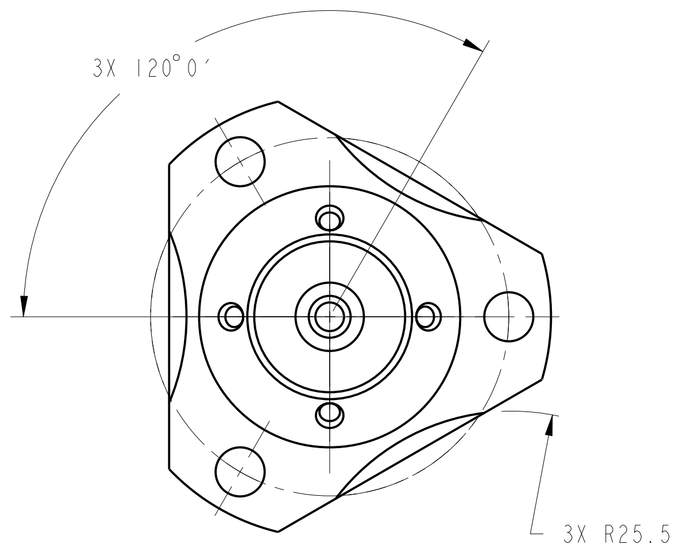

1. MATERIAL:
   TYPE 316 STAINLESS STEEL PER QQ-S-766
2. CERTIFICATE OF CONFORMANCE REQUIRED FOR MATERIALS.
3. ULTRASONIC INSPECT PER MIL-STD-2154, PRIOR TO FABRICATION. ACCEPTANCE PER SECTION 5.5.4., TABLE VI, CLASS LEVEL A.
4. 1.6 Ra ALL MACHINED SURFACES UNLESS OTHERWISE NOTED.
5. ALL INTERNAL PORTS MUST BE BLENDED SMOOTH WITH NO FEATHERED EDGES OR BURRS.
6. FINISHED PART MUST PASS DYE PENETRANT INSPECTION PER ASTM E1417. ACCEPTANCE PER MIL-STD-1907.
7. ELECTROCHEMICAL ETCH DRAWING PART NUMBER 67212MEDM311 ON SPECIFIED SURFACE PER SAE AS478, METHOD 7A (ZONE E7).
8. CLEAN AND PASSIVATE PER MIL-S-5002, PARAGRAPHS 3.4.2.4 AND 3.4.2.4.1. AND QQ-P-35.
9. CLEAN SURFACES WITH 190 PROOF ETHYL ALCOHOL. WIPE WITH CLEAN COTTON SWABS AND/OR LINT-FREE CLOTH.
10. QUANTITY: ONE REQUIRED.

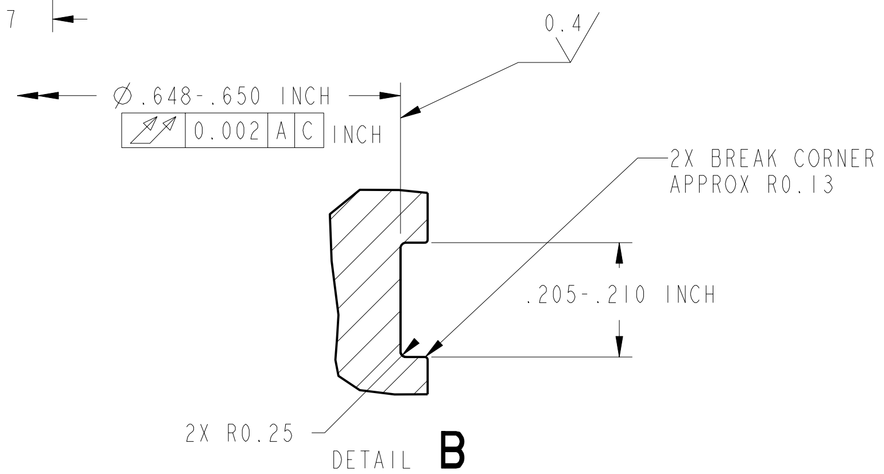

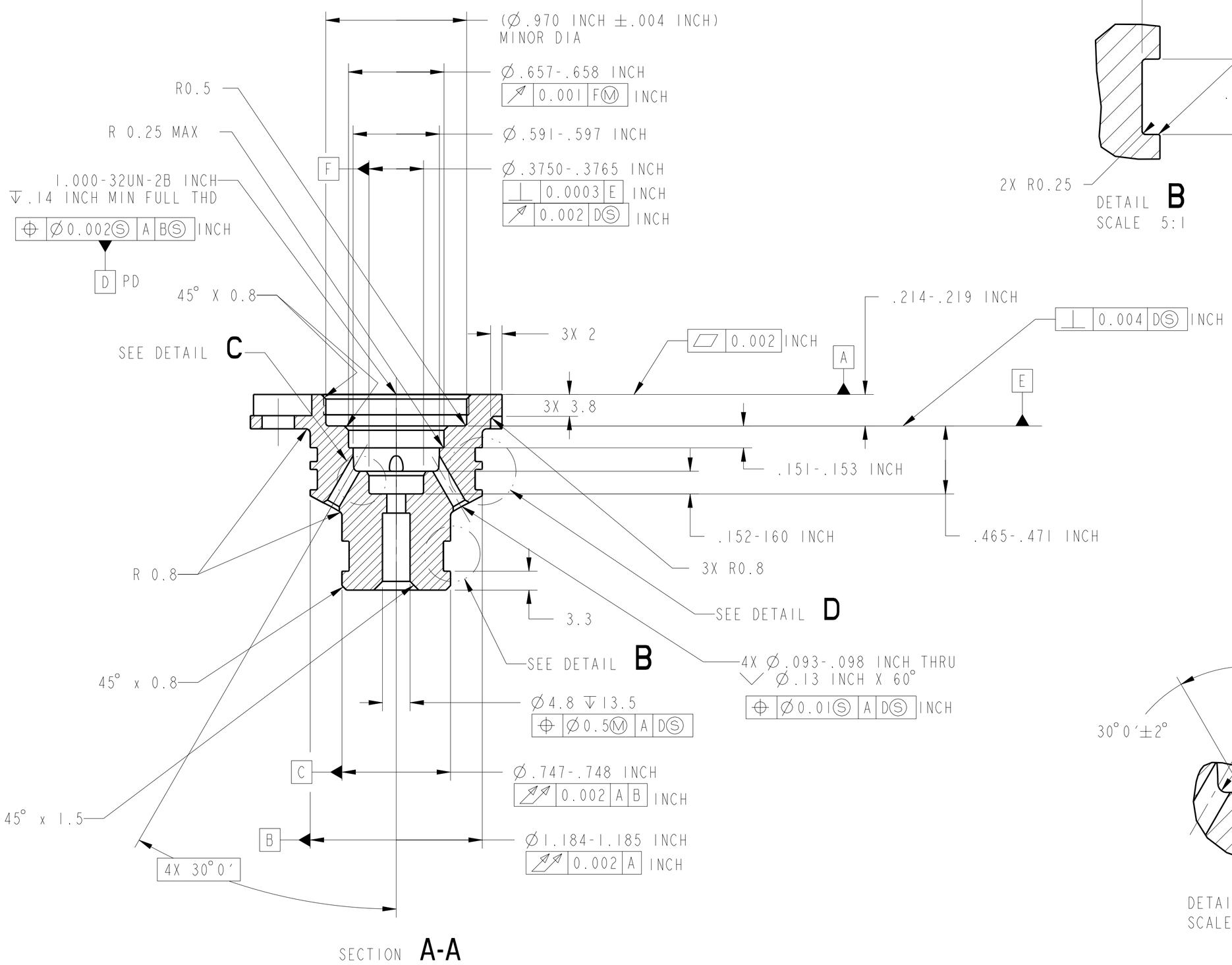

SECTION A-A

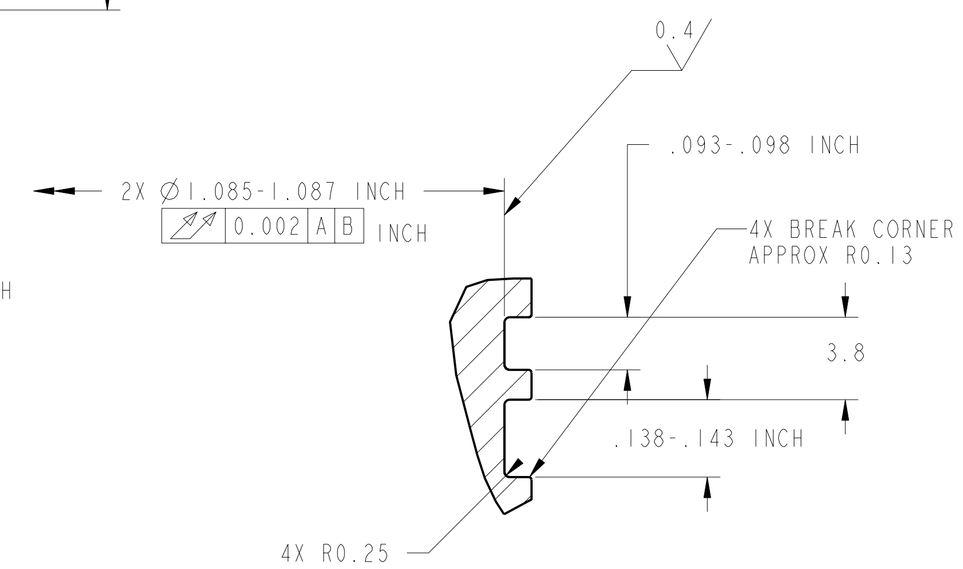

DETAIL D
SCALE 5:1

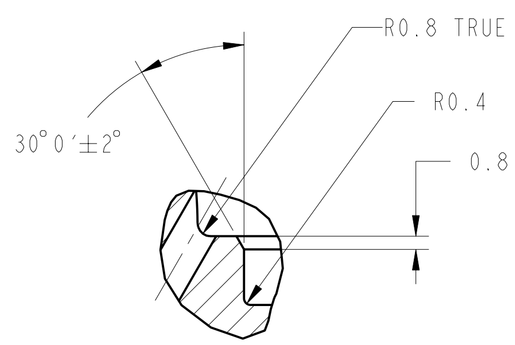

DETAIL C
SCALE 4:1

UNLESS OTHERWISE SPECIFIED:
1. ALL DIMENSIONING AND TOLLERANCING PER ASME Y14.5M-1994
2. ALL DIMENSIONS ARE IN MILLIMETERS
3. BREAK EDGES: 0.2-0.5
4. LINEAR TOLERANCES:
   0.5-6 ±0.1
   OVER 6-30 ±0.2
   OVER 30-120 ±0.3
   OVER 120-315 ±0.5
   OVER 315-1000 ±0.8
   OVER 1000-2000 ±1.2
5. ANGULAR TOLERANCES: 0° 30′

METRIC

THIRD ANGLE PROJECTION

DRAFTER	W. HOLT
DESIGNER	D. ROBINSON
ENGINEER	D. CATALANO
MODEL NAME: 67212MEDM311	
PRO/E VERSION: 18.0	
RELEASE DATE: 05/01/98	

CHG	ZONE	DESCRIPTION	APP/DATE

REVISIONS

NATIONAL AERONAUTICS AND SPACE ADMINISTRATION
LEWIS RESEARCH CENTER
CLEVELAND, OHIO

311

HIGH PRESSURE INLET VALVE BODY

HIGH PRESSURE INLET VALVE ASSEMBLY
67212MEDM310

CHECKPRINT

SIZE	DRAWING NUMBER	REV	STAT	BLDG/CELL
A1	67212MEDM311	-	-	333/ -

SCALE: 2:1 AND NOTED

SHEET 1 OF 1

DRAWING NUMBER 67212MEDM311

REV -

STAT -

NAME:EDJEN OBJECT:67212MEDM311 DATE:30-Oct-00 11:34:09