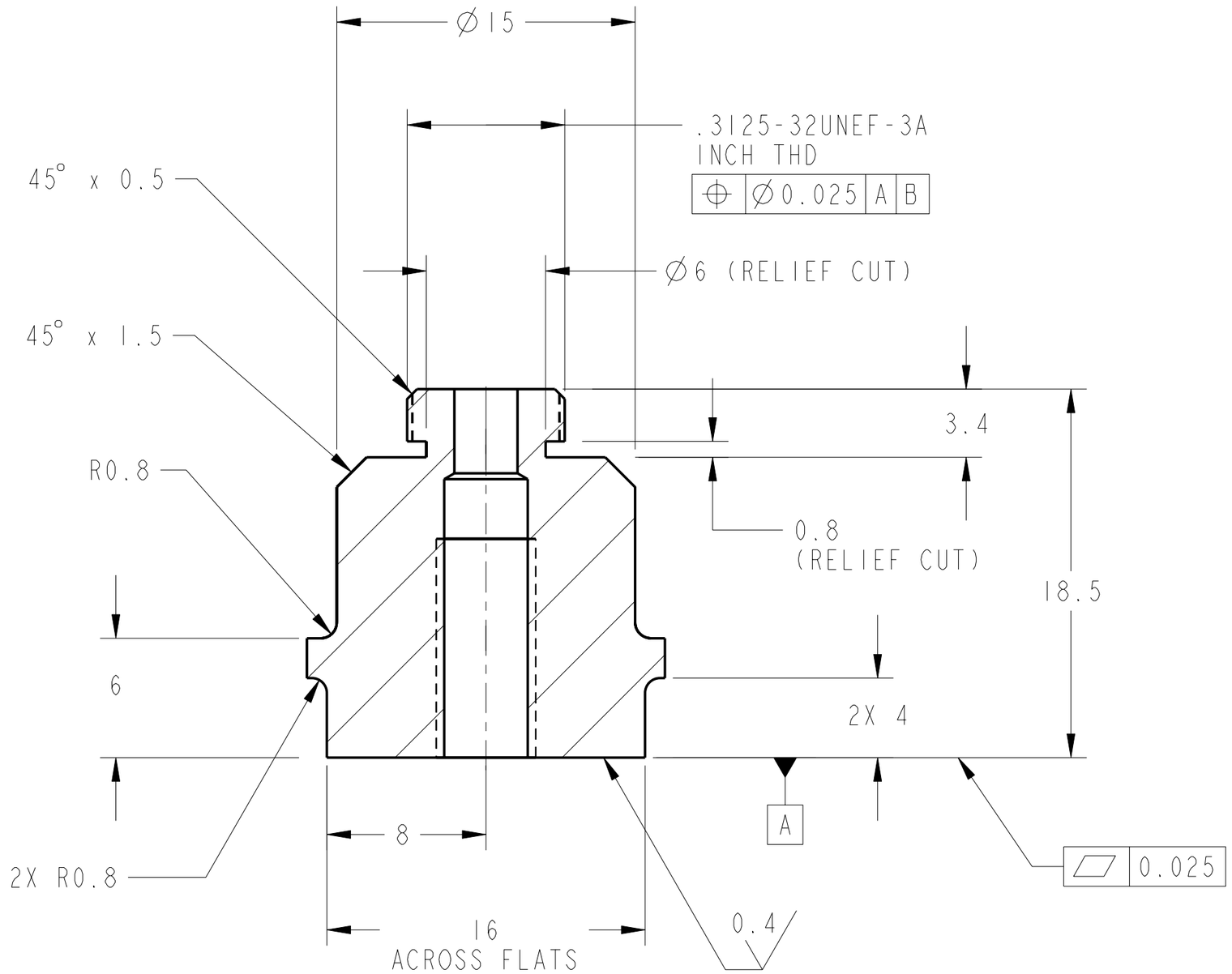

SECTION **A-A**

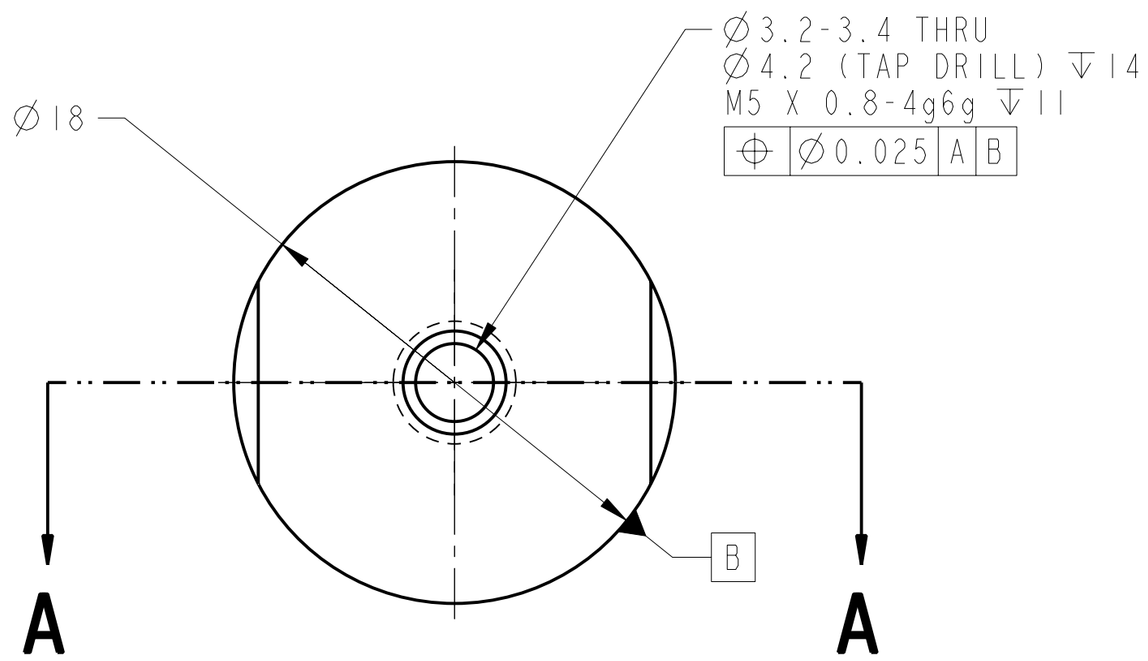

1. MATERIAL:
   TYPE 304 STAINLESS STEEL PER FEDERAL SPEC QQ-S-763 OR QQ-S-766.
2. CERTIFICATE OF CONFORMANCE REQUIRED FOR MATERIAL.
3. 1.6 Ra ALL OVER PER ANSI/ASME B46.1.
4. CLEAN AND PASSIVATE PER MIL-S-5002, PARAGRAPHS 3.4.2.4 AND 3.4.2.4.1, AND FEDERAL SPECIFICATION QQ-P-35.
5. CLEAN SURFACES WITH 190 PROOF ETHYL ALCOHOL. WIPE WITH CLEAN COTTON SWABS AND/OR LINT-FREE CLOTH.
6. IDENTIFY BY TAGGING WITH DRAWING PART NUMBER 67212MEDM308, PER SAE AS478, METHOD 35.
7. HANDLE WITH CLEAN, LINT-FREE GLOVES.
8. BEFORE STORAGE, PROTECT PART WITH CONTAMINATION BARRIER. USE CLEAN, NEW, TRANSPARENT, POLYETHYLENE BAG SEALED WITH FIBERGLASS PACKAGING TAPE. SEAL AND MARK WITH IDENTIFICATION NUMBER ON TAG ATTACHED TO BAG.
9. QUANTITY: ONE REQUIRED.

UNLESS OTHERWISE SPECIFIED:
1. ALL DIMENSIONING AND TOLLERANCING PER ASME Y14.5M-1994
2. ALL DIMENSIONS ARE IN MILLIMETERS
3. BREAK EDGES: 0.2-0.5
4. LINEAR TOLERANCES:
   0.5-6 ±0.1
   OVER 6-30 ±0.2
   OVER 30- 120 ±0.3
   OVER 120-315 ±0.5
   OVER 315-1000 ±0.8
   OVER 1000-2000 ±1.2
5. ANGULAR TOLERANCES: 0° 30′

METRIC

THIRD ANGLE PROJECTION

DRAFTER	D.ROBINSON
DESIGNER	D.ROBINSON
ENGINEER	D.CATALANO
MODEL NAME: 67212MEDM308	
PRO/E VERSION: 18.0	
RELEASE DATE: 06/01/98	

CHG	ZONE	DESCRIPTION	APP/DATE

REVISIONS

NATIONAL AERONAUTICS AND SPACE ADMINISTRATION
LEWIS RESEARCH CENTER
CLEVELAND, OHIO

308 PRESSURE TRANSDUCER ADAPTOR

PRESSURE REGULATOR ASSEMBLY
67212MELM330

SIZE	DRAWING NUMBER	REV	STAT	BLDG/CELL
A2	67212MEDM308	X	R	333/-

SCALE: 4/1 SHEET 1 OF 1

DRAWING NUMBER 67212MEDM308 REV X STAT R

NAME:EDJEN OBJECT:67212MEDM308 DATE:30-Oct-00 11:32:57