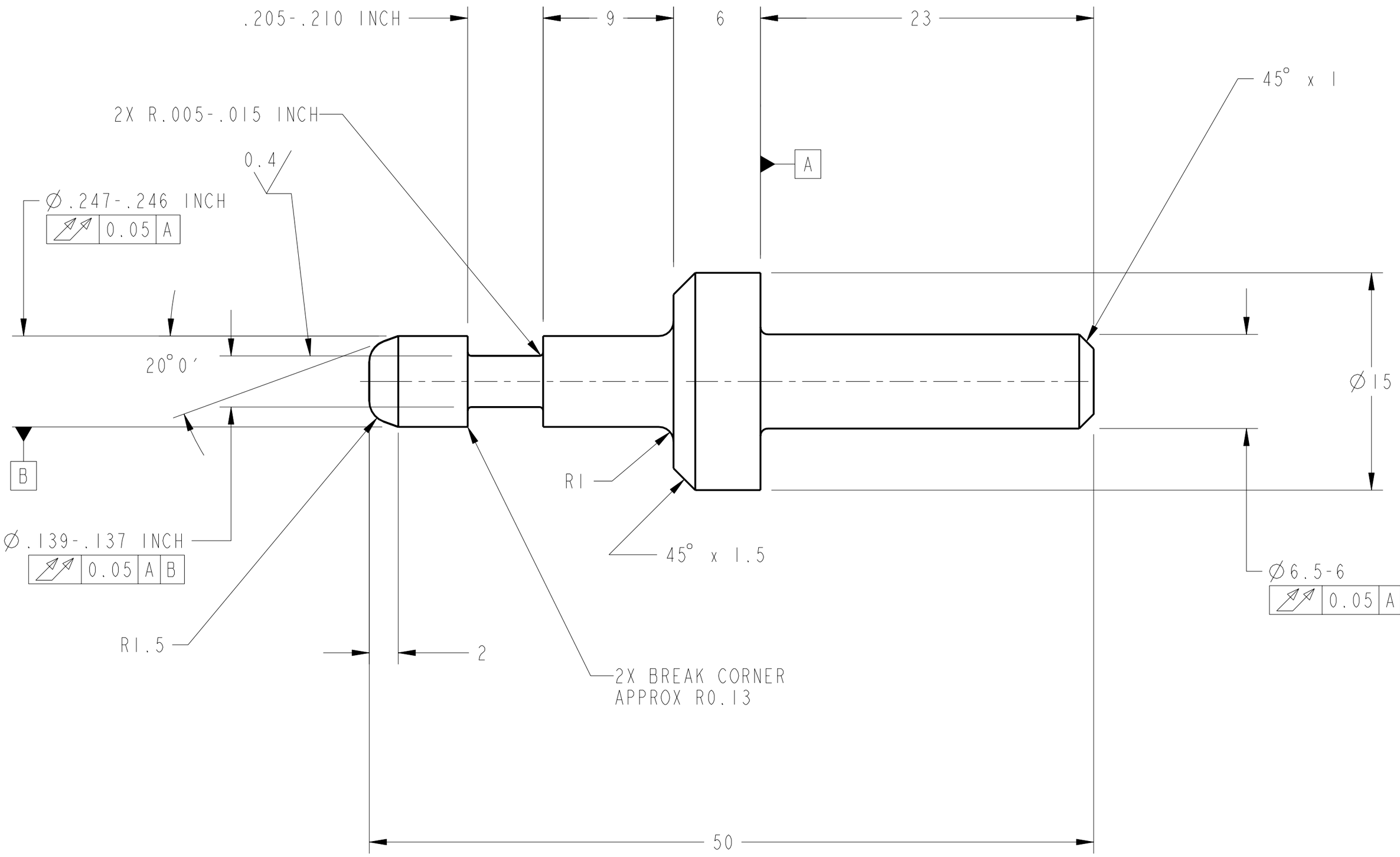

1. MATERIAL:
   DELRIN PLASTIC ROD, COLOR WHITE, PER ASTM D-4181, OR EQUAL.
2. CERTIFICATE OF CONFORMANCE REQUIRED FOR MATERIAL.
3. 0.8 Ra ALL MACHINED SURFACES UNLESS OTHERWISE NOTED PER ANSI/ASME B46.1.
4. CLEAN SURFACES WITH NON-DEODORANT, NONADDITIVE SOAP AND WATER. WIPE WITH CLEAN LINT-FREE CLOTH (NO PAPER PRODUCTS).
5. IDENTIFY BY TAGGING WITH DRAWING PART NUMBER 67212MEDM305, PER SAE AS478, METHOD 35.
6. HANDLE WITH CLEAN, LINT-FREE GLOVES.
7. BEFORE STORAGE, PROTECT WITH CONTAMINATION BARRIER. USE CLEAN, NEW, TRANSPARENT, POLYETHYLENE BAG SEALED WITH FIBERGLASS PACKAGING TAPE. SEAL AND MARK WITH IDENTIFICATION NUMBER ON TAG ATTACHED TO BAG.
8. PROCESS PLAN REQUIRED.

CHG	ZONE	DESCRIPTION	APP/DATE
B	C/D1	NOTE 1 WAS COLOR RED & NOTE 8 WAS ONE REQUIRED	D.ROBINSON 05/11/99
A	D1	NOTE 1 WAS... PERL-P-392A, TYPE 2.	DAR 06/09/98

REVISIONS

UNLESS OTHERWISE SPECIFIED:
1. ALL DIMENSIONING AND TOLLERANCING PER ASME Y14.5M-1994
2. ALL DIMENSIONS ARE IN MILLIMETERS
3. BREAK EDGES: 0.2-0.5
4. LINEAR TOLERANCES:
   0.5-6 ±0.1
   OVER 6-30 ±0.2
   OVER 30-120 ±0.3
   OVER 120-315 ±0.5
   OVER 315-1000 ±0.8
   OVER 1000-2000 ±1.2
5. ANGULAR TOLERANCES: 0° 30′

METRIC

THIRD ANGLE PROJECTION

DRAFTER	D.ROBINSON
DESIGNER	D.ROBINSON
ENGINEER	D.CATALANO
MODEL NAME: 67212MEDM305	
PRO/E VERSION: 18.0	
RELEASE DATE: 06/01/98	

NATIONAL AERONAUTICS AND SPACE ADMINISTRATION
LEWIS RESEARCH CENTER
CLEVELAND, OHIO

305

POPPET

POPPET PRESSURE INDICATOR ASSEMBLY
67212MELM304

SIZE	DRAWING NUMBER	REV	STAT	BLDG/CELL
A2	67212MEDM305	B	R	333/-

SCALE: 4/1 SHEET 1 OF 1

DRAWING NUMBER 67212MEDM305

NAME:EDJEN OBJECT:67212MEDM305 DATE:30-Oct-00 11:30:50