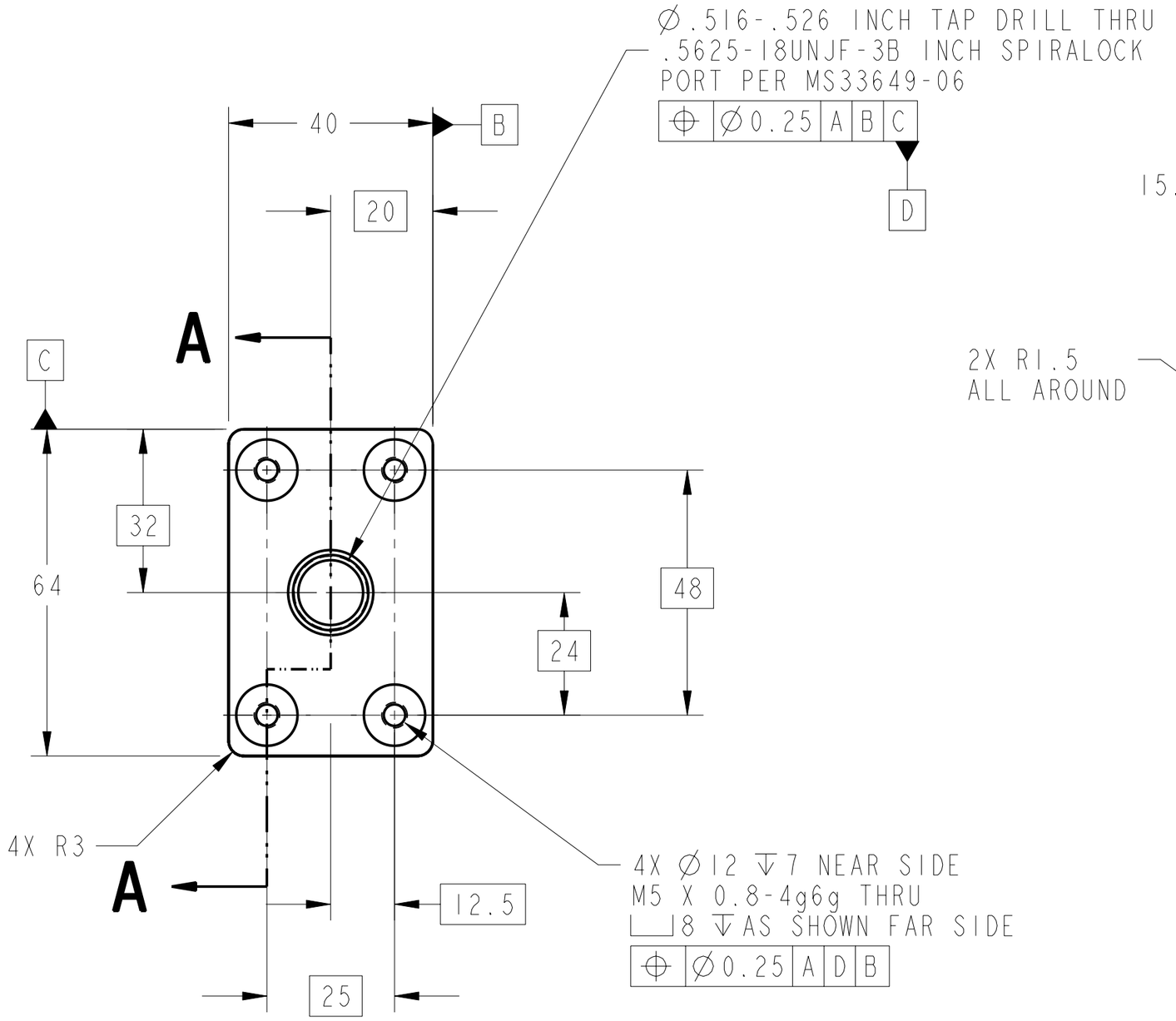

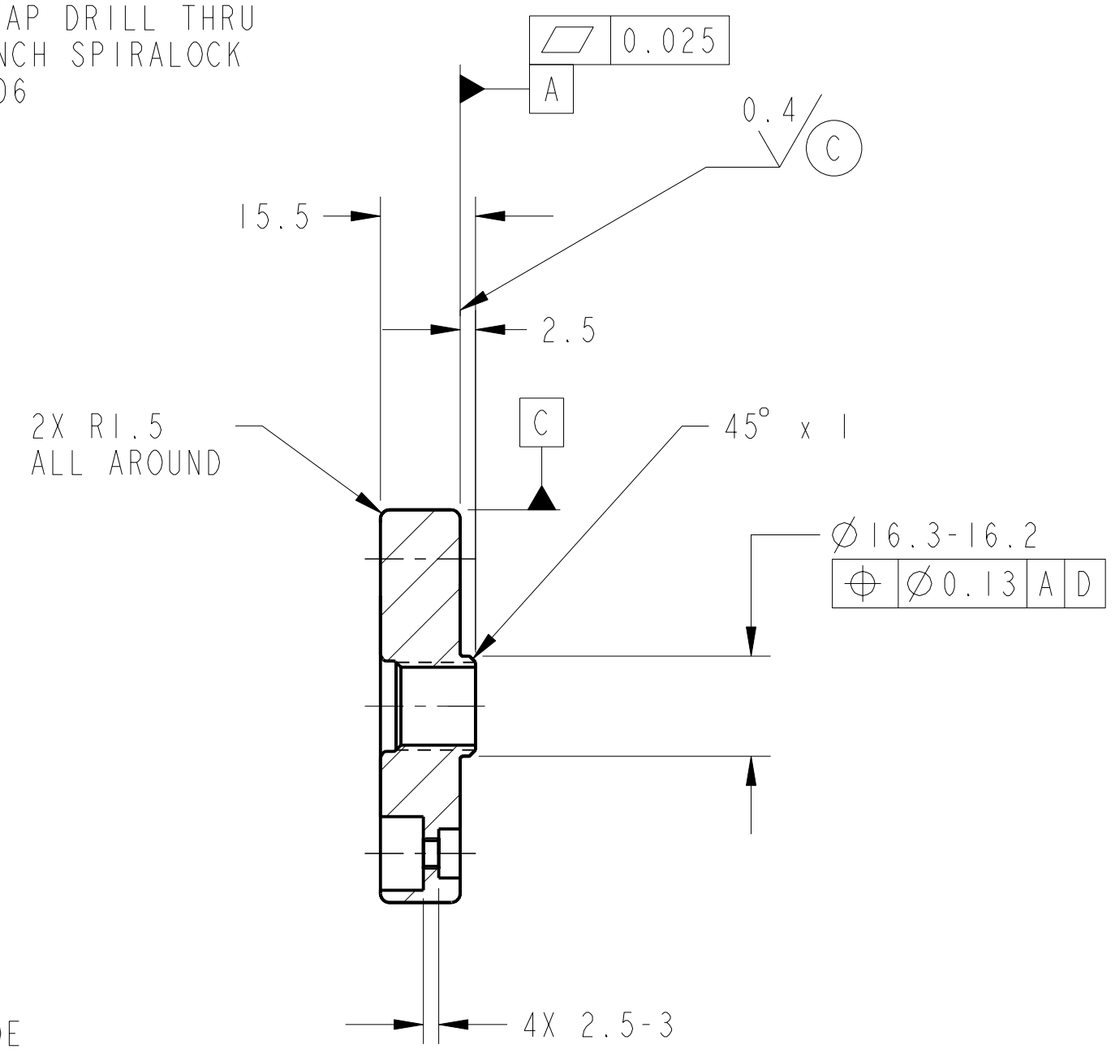

SECTION **A-A**

1. MATERIAL:
   TYPE 304 STAINLESS STEEL PER FEDERAL SPEC QQ-S-763 OR QQ-S-766.
2. CERTIFICATE OF CONFORMANCE REQUIRED FOR MATERIAL.
3. ULTRASONIC INSPECT PER MIL-STD-2154, PRIOR TO FABRICATION. ACCEPTANCE PER SECTION 5.5.4., TABLE VI, CLASS LEVEL A.
4. 1.6 Ra ALL MACHINED SURFACES PER ANSI/ASME B46.1, UNLESS OTHERWISE SPECIFIED.
5. CLEAN AND PASSIVATE PER MIL-S-5002, PARAGRAPHS 3.4.2.4 AND 3.4.2.4.1 AND FEDERAL SPECIFICATION QQ-P-35.
6. IDENTIFY BY TAGGING WITH DRAWING PART NUMBER 67212MEDM303, PER SAE AS478, METHOD 35.
7. HANDLE WITH CLEAN, LINT-FREE GLOVES.
8. BEFORE STORAGE, PROTECT WITH CONTAMINATION BARRIER. USE CLEAN, NEW, TRANSPARENT, POLYETHYLENE BAG SEALED WITH FIBERGLASS PACKAGING TAPE. SEAL AND MARK WITH IDENTIFICATION NUMBER ON TAG ATTACHED TO BAG.
9. QUANTITY: ONE REQUIRED.

CHG	ZONE	DESCRIPTION	APP/DATE
A	D4	ADDED SPIRALOCK REQT'S	D.ROBINSON 03/23/99

REVISIONS

UNLESS OTHERWISE SPECIFIED:
1. ALL DIMENSIONING AND TOLLERANCING PER ASME Y14.5M-1994
2. ALL DIMENSIONS ARE IN MILLIMETERS
3. BREAK EDGES: 0.2-0.5
4. LINEAR TOLERANCES:
   0.5-6 ±0.1
   OVER 6-30 ±0.2
   OVER 30-120 ±0.3
   OVER 120-315 ±0.5
   OVER 315-1000 ±0.8
   OVER 1000-2000 ±1.2
5. ANGULAR TOLERANCES: 0° 30′

METRIC

THIRD ANGLE PROJECTION

DRAFTER	D.ROIBINSON
DESIGNER	D.ROBINSON
ENGINEER	D.CATALANO
MODEL NAME: 67212MEDM303	
PRO/E VERSION: 18.0	
RELEASE DATE: 06/01/98	

NATIONAL AERONAUTICS AND SPACE ADMINISTRATION
LEWIS RESEARCH CENTER
CLEVELAND, OHIO

303 QD MOUNTING PLATE

QD MOUNTING PLATE ASSEMBLY
67212MELM302

SIZE	DRAWING NUMBER	REV	STAT	BLDG/CELL
A2	67212MEDM303	A	R	333/-

SCALE: 1/1 SHEET 1 OF 1

DRAWING NUMBER 67212MEDM303 REV A STAT R

NAME:EDJEN OBJECT:67212MEDM303 DATE:30-Oct-00 11:28:24