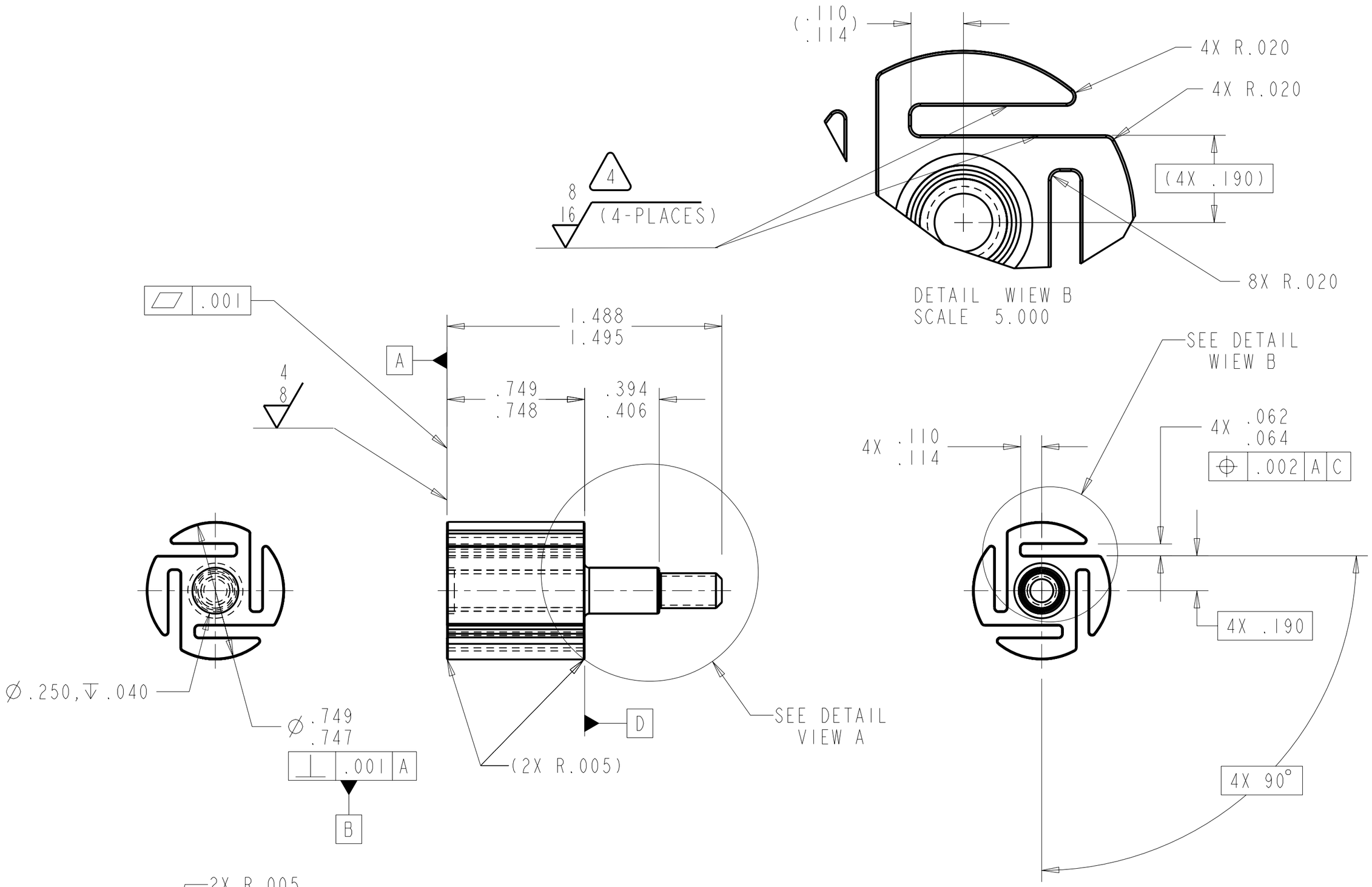

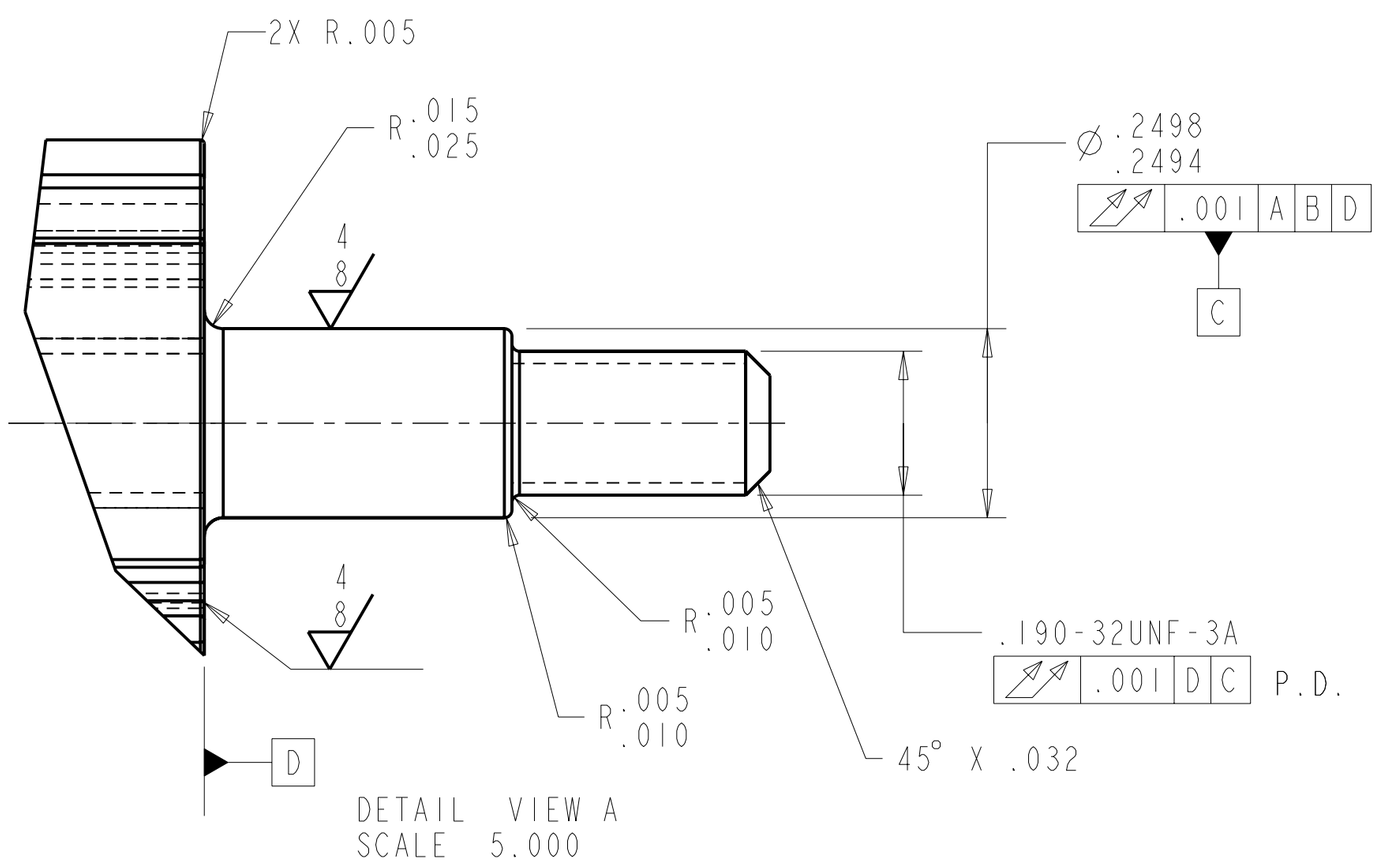

1. MATERIAL:
   TYPE 316 STAINLESS STEEL PER FEDERAL SPEC QQ-S-763, CONDITION A.
2. 32 Ra ALL OVER UNLESS OTHERWISE NOTED PER ANSI/ASME B46.1.
3. BREAK EXTERNAL CORNERS R0 .005-.010
4. TOOL MARKS ON THE SLOT WALLS TO BE PERENDICULAR TO THE SLOT BOTTOM
5. CLEAN AND PASSIVATE PER MIL-S-5002, PARAGRAPHS 3.4.2.4 AND 3.4.2.4.1 AND FEDERAL SPECIFICATION QQ-P-35.
6. IDENTIFY BY TAGGING WITH DRAWING PART NUMBER 67212MEDM259, PER SAE AS478, METHOD 35.
7. ESTIMATED WEIGHT: 0.078 LBS.
8. QUANTITY: ONE REQUIRED.

CHG	ZONE	DESCRIPTION	APP/DATE

REVISIONS

PRIOR TO USE VERIFY THE INTENDED PURPOSE IN PDM ("FOR" ATTRIBUTE)

UNLESS OTHERWISE SPECIFIED DIMENSIONS ARE IN INCHES

TOLERANCE ON	
.X	± 0.03
.XX	± 0.01
.XXX	± 0.005
FRACTION	± -
ANGULAR	± 0.50°
BREAK EDGES	AS NOTED

CONTRACT	NAS-27600
CONTRACTOR	ANALEX CORP.
TASK ORDER	60
DRAFTER	LThomas
ENGINEER	ANLX/I.DRALYUK
DESIGNER	ANLX/I.DRALYUK

DIMENSIONING AND TOLERANCING PER ASME Y14.5M-1994

NATIONAL AERONAUTICS AND SPACE ADMINISTRATION
JOHN H. GLENN RESEARCH CENTER
LEWIS FIELD
CLEVELAND, OHIO

ROTOR

67212MEDM250

EXHAUST VENT PUMP ASSEMBLY

PDM REL LEVEL: PDM REVISION: -

PDM DATABASE:
MODEL NAME: 67212MEDM259

CHECK FOR ANY OUTSTANDING ECO'S PRIOR TO USE

SIZE	DRAWING NUMBER	REV	BLDG	AREA
C	67212MEDM259	-	333	-
			UNITS: INCH	
SCALE: 2.000	INITIAL REL DATE 03/20/2000	SHEET 1 OF 1	DISCIPLINE MECHNICAL	

PRO/E VERSION: 20.0

SIZE C DRAWING NUMBER 67212MEDM259 REV -

NAME:EDUEN OBJECT:67212MEDM250 DATE:30-Oct-00 11:36:33